PROJECT INFORMATION

PARCEL: 17 008900080927
TAX DISTRICT: 59
PROPERTY CLASS: E1-EXEMPT- PUBLIC PROPERTY
LAND LOT: 185 & 186
ZONING DISTRICT: CON(CONSERVATION AND OPEN SPACE)
NEIGHBORHOOD: C205

PROJECT SITE

TOTAL ACREAGE: .5663 (24,668 SF)
TOTAL DISTURBED AREA: .10 AC (APPROX. 4,350 SF)
GPS COORDINATES OF CONSTRUCTION EXIT:
33°55'17.23"N, 84°22'57.69"W (33.9214, -84.3826)

OWNER INFO.

MIKE PERRY
CITY OF SANDY SPRINGS
1 GALAMBOS WAY
SANDY SPRINGS, GA 30328
770-235-3557
MPERRY@SANDYSPRINGSGA.GOV

DESIGNER OF RECORD

POND & COMPANY
3500 PARKWAY LANE SUITE 500
PEACHTREE CORNERS, GA 30092
PH: 404-678-4828
CONTACT: BRAD JONES
JONESB@PONDCO.COM

GENERAL NOTES:

1. ALL WATER IMPROVEMENTS INSIDE EXISTING METER. NO ADDITIONAL METER CONNECTIONS REQUIRED.
2. SEWER SERVICES PROVIDED BY FULTON COUNTY. ALL SEWER CONNECTIONS TO BE TO EXISTING SEWER LINE.

CITY OF SANDY SPRINGS - RECREATION AND PARKS

HERITAGE PARK IMPROVEMENTS

6110 BLUE STONE ROAD NE
SANDY SPRINGS, GA 30328

POND PROJECT NUMBER: 1190708
PROJECT LDP #: RP19-00001

CONSTRUCTION DOCUMENTS

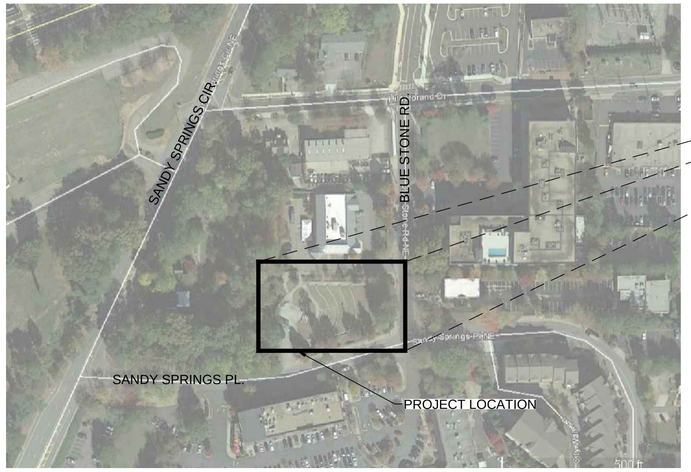

PROJECT SITE MAP
N.T.S.

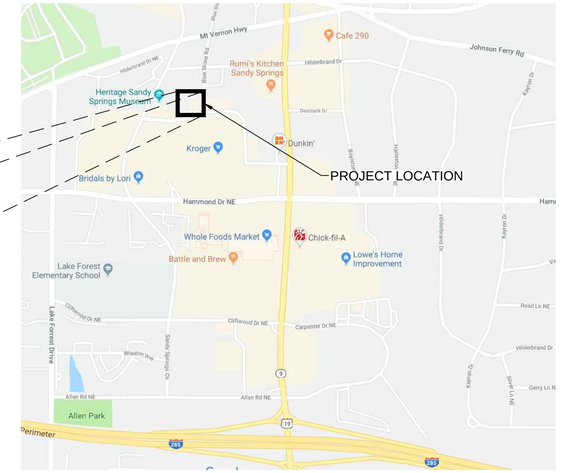

PROXIMITY MAP
N.T.S.

SHEET INDEX	
Sheet Title	Sheet Description
G-001	COVER SHEET
C-001	GENERAL CIVIL NOTES
C-002	GENERAL CIVIL NOTES
V-101	BOUNDARY SURVEY
V-102	BOUNDARY SURVEY
CD101	DEMOLITION PLAN
CS101	SITE PLAN
CG101	GRADING PLAN
CU101	UTILITY PLAN
CU201	SANITARY SEWER PROFILE
C-501	SITE DETAILS
C-502	SITE DETAILS
C-503	SITE DETAILS
C-504	SITE DETAILS
C-505	SITE DETAILS
CE001	EROSION CONTROL CHECKLIST
CE002	EROSION CONTROL NOTES
CE003	EROSION CONTROL NOTES
CE004	EROSION CONTROL NOTES
CE101	EROSION CONTROL PLAN
CE501	EROSION & SEDIMENT CONTROL DETAILS
CE502	EROSION & SEDIMENT CONTROL DETAILS
CE503	EROSION & SEDIMENT CONTROL DETAILS
LD101	TREE PROTECTION PLAN
LP101	LANDSCAPE PLAN
IR101	DELEGATED IRRIGATION PLAN
L-501	LANDSCAPE NOTES
L-502	LANDSCAPE NOTES & DETAILS

SHEET TITLE	SHEET DESCRIPTION
G-101	LIFE SAFETY PLAN & BUILDING CODE
A-001	GENERAL NOTES, ABBREVIATIONS, & SYMBOLS
A-002	PARTITION TYPES & DETAILS
A-101	FLOOR PLAN
A-131	REFLECTED CEILING PLAN
A-151	ROOF PLAN
A-201	EXTERIOR ELEVATIONS
A-301	BUILDING SECTIONS
A-302	WALL SECTIONS
A-303	WALL SECTIONS
A-304	SECTION & MISC. DETAILS
A-401	ENLARGED PLAN & ELEVATIONS
A-601	DOOR DETAILS & FINISH SCHEDULE
S-001	GENERAL STRUCTURAL NOTES
S-002	GENERAL STRUCTURAL NOTES
S-003	SPECIAL INSPECTIONS
S-004	WIND LOAD DIAGRAM
S-101	FOUNDATION PLAN
S-102	ROOF PLAN
S-201	STRUCTURAL ELEVATIONS
S-301	FRAMING SECTIONS
S-302	FRAMING ELEVATIONS
S-501	STRUCTURAL DETAILS
S-502	STRUCTURAL DETAILS
S-503	STRUCTURAL DETAILS
M-001	MECHANICAL GENERAL NOTES AND DESIGN CRITERIA
M-002	MECHANICAL ABBREVIATIONS AND LEGENDS
M-003	MECHANICAL SPECIFICATIONS
M-101	MECHANICAL HVAC PLAN
M-501	MECHANICAL DETAILS

SHEET TITLE	SHEET DESCRIPTION
M-601	MECHANICAL SCHEDULES & CONTROLS
P-001	PLUMBING GENERAL NOTES, ABBREVIATIONS, AND LEGENDS
P-002	PLUMBING SPECIFICATIONS
P-101	PLUMBING SANITARY WASTE & VENT PLAN
P-102	PLUMBING DOMESTIC PIPING PLAN
P-501	PLUMBING DETAIL & SCHEDULES
P-901	PLUMBING D RISER DIAGRAMS
E-001	GENERAL ELECTRICAL NOTES
ES101	ELECTRICAL SITE PLAN
E-101	LIGHTING PLAN
E-111	POWER PLAN
E-501	ELECTRICAL DETAILS
E-601	POWER RISER DIAGRAM
E-602	PANELBOARD, CONDUIT, & LIGHTING FIXTURE SCHEDULE
E-701	ELECTRICAL SPECIFICATIONS
E-702	ELECTRICAL SPECIFICATIONS

EROSION CONTROL REQUIREMENTS:

A. PRIOR TO ANY CONSTRUCTION, A STABILIZED CONSTRUCTION ENTRANCE SHALL BE CONSTRUCTED AT EACH ENTRY TO OR EXIT FROM THE SITE.

B. THE CONSTRUCTION EXITS SHALL BE MAINTAINED IN A CONDITION WHICH WILL PREVENT TRACKING OR FLOW OF MUD ONTO PUBLIC RIGHT-OF-WAY. THIS MAY REQUIRE PERIODIC TOP DRESSING WITH STONE, AS CONDITIONS DEMAND, AND REPAIR AND/OR CLEAN-OUT OF STRUCTURES USED TO TRAP SEDIMENT. ALL MATERIALS SPILLED, DROPPED, WASHED, OR TRACKED FROM VEHICLE ONTO PUBLIC ROADWAY OR INTO STORM DRAIN MUST BE REMOVED.

C. PRIOR TO COMMENCING LAND DISTURBANCE ACTIVITY THE LIMITS OF DISTURBANCE SHALL BE CLEARLY AND ACCURATELY DEMARCATED WITH STAKES, RIBBONS, OR OTHER APPROPRIATE MEANS. THE LOCATION AND EXTENT OF ALL AUTHORIZED LAND DISTURBANCE SHALL OCCUR WITHIN THE APPROVED LIMITS INDICATED ON THE APPROVED PLANS.

D. IMMEDIATELY AFTER THE ESTABLISHMENT OF CONSTRUCTION ENTRANCES/EXITS, ALL PERIMETER EROSION CONTROL DEVICES AND STORMWATER MANAGEMENT DEVICES SHALL BE INSTALLED PRIOR TO ANY OTHER CONSTRUCTION.

E. OWNER AGREES TO PROVIDE AND MAINTAIN OFF-STREET PARKING ON THE SUBJECT PROPERTY DURING THE ENTIRE CONSTRUCTION PERIOD.

F. THE CONTRACTOR SHALL FURNISH AND MAINTAIN ALL NECESSARY BARRICADES WHILE ROADWAY FRONTAGE IMPROVEMENTS ARE BEING MADE.

G. THE CONSTRUCTION OF THE SITE WILL INITIATE WITH THE INSTALLATION OF EROSION CONTROL MEASURES SUFFICIENT TO CONTROL SEDIMENT DEPOSITS AND EROSION. ALL SEDIMENT CONTROL WILL BE MAINTAINED UNTIL ALL UP STREAM GROUND WITHIN THE CONSTRUCTION AREA HAS BEEN COMPLETELY STABILIZED WITH PERMANENT VEGETATION AND ALL ROADS/DRIVEWAYS HAVE BEEN PAVED.

H. FAILURE TO INSTALL, OPERATE, OR MAINTAIN ALL EROSION CONTROL MEASURES WILL RESULT IN ALL CONSTRUCTION BEING STOPPED ON THE JOB SITE UNTIL SUCH MEASURES ARE CORRECTED BACK TO CITY OF SANDY SPRINGS STANDARDS.

I. A COPY OF THE APPROVED LAND DISTURBANCE PLAN AND PERMIT SHALL BE PRESENT ON THE SITE WHENEVER LAND DISTURBANCE ACTIVITY IS IN PROGRESS.

J. ALL SEWER EASEMENTS DISTURBED MUST BE DRESSED AND GRASSED TO CONTROL EROSION.

24-HOUR LOCAL CONTACT:
MIKE PERRY
RECREATION & PARKS MANAGER, CITY OF SANDY SPRINGS
PH. 770-235-3557

24-HOUR EROSION CONTROL CONTACT:
NAME: _____
COMPANY: _____
ADDRESS: _____
PHONE #: _____
GSWCC # _____ EXPIRATION: _____
TITLE: REPRESENTATIVE FOR PRIMARY PERMITTEE (TO BE FILLED OUT BY CONTRACTOR UPON SELECTION, CONTRACTOR TO PROVIDE LEVEL I CERTIFICATION)

APPLICABLE CODES:
2012 INTERNATIONAL BUILDING CODE (IBC)
NFPA 101 LIFE SAFETY CODE 2012 EDITION
INTERNATIONAL FIRE CODE 2012 EDITION
GEORGIA ACCESSIBILITY CODE 120-3-20 (.01-.08)

SANDY SPRINGS GEORGIA

GEORGIA REGISTERED No. 3339 LANDSCAPE ARCHITECT ROBERT BRADLEY JONES
GSWCC: #31792
10/21/2019 SEAL

MARK	DESCRIPTION	DATE	APPR.
0	BID SET	2019.10.16	

DESIGNED BY: PBT
DWN BY: PBT
CKD BY: RBJ
SUBMITTED BY: PBT
DATE: OCTOBER 16, 2019
SOLICITATION NO.: -
CONTRACT NO.: -
FILE NUMBER: -
FILE NAME: G-001.DWG
SIZE: 22" x 34"
PLOT SCALE: 1:1
PLOT DATE: 10/21/2019

CITY OF SANDY SPRINGS
1 GALAMBOS WAY
SANDY SPRINGS, GA 30328

POND
3500 Parkway Lane
Peachtree Corners, GA
30092 - Suite 500
Phone 678.336.7740
Fax 678.336.7744
POND PROJECT No. 1190708

HERITAGE PARK IMPROVEMENTS

COVER SHEET

SHEET IDENTIFICATION NUMBER
G-001

FILE PATH: \\ACP3SERVER\RESOURCES\PROJECTS\FY19\1190708\04.CAD_BIM\04.02.CAD\G-001.DWG PLOTTED BY: JONES, BRAD

CIVIL GENERAL NOTES:

1. ALL WORK SHALL COMPLY WITH APPLICABLE STATE, FEDERAL AND LOCAL CODES, SPECIFICATIONS AND REQUIREMENTS. ALL NECESSARY LICENSES AND PERMITS ALONG WITH ANY ASSOCIATED FEES SHALL BE OBTAINED BY THE CONTRACTOR AT THEIR EXPENSE. IF DIFFERING CONDITIONS EXIST BETWEEN THE DRAWINGS, SPECIFICATIONS AND/OR OTHER APPLICABLE REGULATIONS AND GUIDELINES, NOTIFY THE OWNER'S PROJECT MANAGER BEFORE PROCEEDING.

2. THIS SHEET IS PART OF A MULTI-SHEET SET OF CONSTRUCTION PLANS WITH SPECIFICATIONS WITHIN PROJECT MANUAL, AND SHALL BE READ WITH THE FULL SET TO BEST ENSURE PROPER INTERPRETATION.

3. REFER TO INCLUDED SURVEY (V-SERIES) FOR EXISTING CONDITIONS.

4. ALL DIMENSIONS ARE TAKEN FROM/TO FENCELINES, PROPERTY LINES, EDGE OF PAVEMENT, CENTERLINE OF UTILITY, CENTERLINE OF MANHOLE OR CATCH BASIN, CENTERLINE OF ROAD, BACK OF CURB, CENTER OF PAINT STRIPE, AND FACE OF WALL OR BUILDING UNLESS OTHERWISE NOTED.

5. CONTRACTOR SHALL INSPECT ALL SEDIMENT AND EROSION CONTROL MEASURES DAILY AND DURING PROLONGED PERIODS OF CONTINUOUS RAINFALL EVENTS TO ENSURE THAT ALL CONTROLS ARE FUNCTIONING PROPERLY. DAMAGED CONTROLS SHALL BE REPLACED BY THE END OF THE WORKDAY.

6. CONTRACTOR SHALL PROVIDE, INSTALL, AND MAINTAIN ALL REQUIRED SEDIMENT AND EROSION CONTROL MEASURES AS SHOWN ON THE DRAWINGS, DURING ALL PHASES OF CONSTRUCTION.

7. THE CONTRACTOR SHALL BE RESPONSIBLE FOR MAINTAINING A MARKED-UP SET OF DESIGN DRAWINGS SHOWING "AS-BUILT" CONDITIONS. THESE "RECORD DRAWINGS" SHALL BE MADE AVAILABLE TO THE OWNER UPON REQUEST. THE MARK-UPS SHALL BE AT THE SITE AT ALL TIMES AND SHALL BE UTILIZED TO DEVELOP FINAL RECORD DRAWINGS.

8. ALL INITIAL EROSION AND SEDIMENTATION CONTROL MEASURES AND DEVICES MUST BE IN PLACE PRIOR TO ANY LAND DISTURBANCE.

9. EXISTING CONDITIONS SHOWN ARE FROM A BOUNDARY & TOPOGRAPHIC SURVEY OF 6110 BLUE STONE RD. FOR CITY OF SANDY SPRINGS PREPARED BY: SPG SURVEYING, DATED 11/27/2015.

10. NO DETENTION FACILITY IS PROPOSED ON THIS PROJECT.SHOULD ANY DETENTION OR WATER QUALITY FACILITIES BE ADDED TO THE PROJECT, THE CONTRACTOR SHALL PROVIDE AS-BUILTS OF SAME, INCL. ONE COMPLETE HARD COPY, PDF, AND CAD FILE FOR THE TOPOGRAPHIC SURVEY OF THE STORMWATER FACILITY, A DETAILED SKETCH OF THE AS-BUILT OUTLET CONTROL STRUCTURE FOR EACH ITERATION OF MODIFICATIONS AND ORIGINAL - ALL PREPARED AND SEALED BY A REGISTERED LAND SURVEYOR IN THE STATE OF GEORGIA.

11. THE PROVIDED SURVEY SHOULD MEET ALL REQUIREMENTS OF THE CITY OF SANDY SPRINGS, AND SHOULD BE FULLY ADEQUATE FOR MODELING. IF ISSUES ARE DISCOVERED DURING MODELING, THE CONTRACTOR SHALL BE RESPONSIBLE FOR PROVIDING UPDATED SURVEY THAT MEETS THE REQUIREMENTS ABOVE, AND FOR THE ADDITIONAL MODELING COSTS BY THE ENGINEER. THIS SHALL APPLY TO EACH ITERATION OF MODIFICATIONS REQUIRED.

12. THERE ARE NO KNOWN EXISTING LANDFILLS OR PROPOSED ON-SITE BURY PITS.

13. THIS PROJECT IS NOT IN A FLOOD HAZARD AREA AS PER FEMA FLOOD INSURANCE RATE MAP OF CITY OF SANDY SPRINGS. COMMUNITY PANEL: 13121C0142 F, EFFECTIVE DATE: SEPTEMBER 18,2013.

14. ALL TRAFFIC SIGNS AND PAVEMENT MARKINGS SHALL BE IN ACCORDANCE WITH THE "MANUAL ON UNIFORM TRAFFIC CONTROL DEVICES" (MUTCD), LATEST EDITION.

15. CONTRACTOR TO ENSURE ALL EXISTING TOPS OF MANHOLES AND VALVE BOXES ARE RAISED OR LOWERED TO BE FLUSH WITH FINISHED GRADES, UNLESS NOTED OTHERWISE.

16. ALL NEW PAVEMENT AND SIDEWALKS SHALL BE CONSTRUCTED FLUSH WITH EXISTING, WITH NO PONDING OF STORMWATER.

17. IT WILL BE THE RESPONSIBILITY OF THE CONTRACTOR TO ENSURE THAT ALL REQUIRED PERMITS AND/OR EASEMENTS ARE OBTAINED AND IN HAND BEFORE BEGINNING ANY CONSTRUCTION. NO CONSTRUCTION OR FABRICATION OF ANY ITEM SHALL BEGIN UNTIL THE CONTRACTOR HAS RECEIVED ALL PLANS AND ANY OTHER DOCUMENTATION FROM ALL OF THE PERMITTING AND ANY OTHER REGULATORY AUTHORITIES. ANY PENALTIES, STOP WORK ORDERS OR ADDITIONAL WORK RESULTING FROM THE CONTRACTOR BEING IN VIOLATION OF THE REQUIREMENTS ABOVE, SHALL BE FULLY BORNE BY THE CONTRACTOR.

18. CONTRACTOR SHALL GRADE ALL DISTURBED AREAS TO ENSURE POSITIVE DRAINAGE AWAY FROM ALL BUILDINGS AND TO DRAINAGE STRUCTURES OR DITCHES. NATURAL FLOW OF SURROUNDING WATERS SHALL NOT BE DISTURBED DURING CONSTRUCTION, UNLESS SHOWN OTHERWISE.

19. CONTRACTOR SHALL VERIFY ALL EXISTING CONDITIONS, COORDINATES, AND DIMENSIONAL INFORMATION PRIOR TO CONSTRUCTION. THE CONTRACTOR SHALL BRING ALL DISCREPANCIES TO THE ATTENTION OF THE DESIGNER PRIOR TO STARTING CONSTRUCTION.

20. THE LOCATION OF ALL EXISTING UTILITIES AND STORM DRAINAGE SHOWN ON THE PLANS HAVE BEEN DETERMINED FROM THE BEST INFORMATION AVAILABLE AND ARE GIVEN FOR THE CONVENIENCE OF THE CONTRACTOR. THE ENGINEER ASSUMES NO RESPONSIBILITY FOR INACCURACY. PRIOR TO THE START OF ANY CONSTRUCTION ACTIVITY IT SHALL BE THE CONTRACTOR'S RESPONSIBILITY TO LOCATE THE VARIOUS UTILITIES AND TO MAKE THE NECESSARY ARRANGEMENTS FOR ANY RELOCATION OF THESE UTILITIES WITH THE OWNER OF THE UTILITY. THE CONTRACTOR SHALL EXERCISE CAUTION WHEN CROSSING UNDERGROUND UTILITIES, WHETHER SHOWN ON THE PLAN OR LOCATED BY THE UTILITY COMPANY. ALL UTILITIES WHICH INTERFERE WITH THE PROPOSED CONSTRUCTION SHALL BE BROUGHT TO THE ATTENTION OF THE DESIGNER IMMEDIATELY. ANY FEES ASSOCIATED WITH UTILITY RELOCATIONS SHALL BE BORNE BY THE CONTRACTOR IN ACCORDANCE WITH RESPECTIVE UTILITY COMPANY STANDARDS. THE CONTRACTOR SHALL COORDINATE DISCONNECTION OF EXISTING UTILITIES WITH THE APPROPRIATE UTILITY PROVIDER.

21. THE CONTRACTOR SHALL BE RESPONSIBLE FOR COORDINATING INSTALLATION OF ALL NEW UTILITIES WITH THOSE THAT ARE EXISTING. IF EXISTING UTILITIES ARE IN CONFLICT WITH NEW UTILITIES, THE SITE CONTRACTOR SHALL NOTIFY THE OWNER'S PROJECT MANAGER BEFORE PROCEEDING WITH CONSTRUCTION.

22. CONTRACTOR SHALL FURNISH AND MAINTAIN ANY AND ALL NECESSARY BARRICADES AROUND THE WORK AND PROVIDE PROTECTION AGAINST WATER DAMAGE AND SOIL EROSION.

23. CONTRACTOR TO MOVE ALL CONSTRUCTION DEBRIS OFF THE PROPERTY AND DISPOSE DEBRIS AT A LEGAL, PERMITTED LANDFILL CONSISTENT WITH ALL LOCAL, STATE, AND FEDERAL REQUIREMENTS.

24. NO PARKING, STORAGE OR OTHER CONSTRUCTION ACTIVITIES ARE TO OCCUR WITHIN TREE PROTECTION AREAS.

25. THE CONTRACTOR'S MEANS, METHODS, SEQUENCE, TECHNIQUES OR PROCEDURES IN PERFORMING THE WORK IS SOLELY THE RESPONSIBILITY OF THE CONTRACTOR, WHO IS ALSO RESPONSIBLE FOR COMPLYING WITH ALL HEALTH AND SAFETY PRECAUTIONS AS REQUIRED BY THE APPLICABLE REGULATORY AGENCY.

26. THE DESIGN ADEQUACY AND SAFETY OF ALL BRACING, SHORING AND TEMPORARY SUPPORTS, ETC. ARE THE SOLE RESPONSIBILITY OF THE CONTRACTOR.

27. PROTECT ALL EXISTING FEATURES AND EXISTING LANDSCAPING THAT WILL REMAIN. ANY ITEM DAMAGED DURING THE PERFORMANCE OF THE WORK WILL BE RESTORED TO ORIGINAL CONDITION, OR REPLACED WITH NEW AT THE CONTRACTOR'S EXPENSE. CONTRACTOR SHALL TAKE PRECAUTIONS TO AVOID OVERLOADING PAVEMENTS WHICH WILL REMAIN.

28. CONTRACTOR SHALL FURNISH AND MAINTAIN ANY AND ALL NECESSARY BARRICADES AROUND THE WORK AND PROVIDE PROTECTION AGAINST WATER DAMAGE AND SOIL EROSION.

29. PAVEMENT MARKING, INCLUDING STANDARD HANDICAP SYMBOLS, PARKING STRIPING AND TRAFFIC ARROWS, SHALL BE THERMOPLASTIC OF VARIOUS WIDTHS AND COLOR AT LOCATIONS SHOWN.

SURVEY REFERENCE NOTES:

1. SEE THE INCLUDED SURVEY (SHEET V-101) FOR APPLICABLE SURVEY NOTES, SYMBOLS LEGEND, AND ABBREVIATIONS.

2. CONTRACTOR SHALL ESTABLISH SURVEY CONTROL NETWORK OUTSIDE LIMITS OF DEMOLITION PRIOR TO COMMENCEMENT OF WORK. THIS WORK MUST BE PERFORMED BY A GEORGIA LICENSED LAND SURVEYOR.

GRADING AND EARTHWORK NOTES:

1. POSITIVE DRAINAGE SHALL BE MAINTAINED AT ALL TIMES TO PREVENT SATURATION OF EXPOSED SOILS IN CASE OF SUDDEN RAINS. CONTRACTOR SHALL LOCATE ALL EXISTING UTILITIES PRIOR TO ANY EXCAVATION.

2. CONTRACTOR SHALL GRADE ALL DISTURBED AREAS TO ENSURE POSITIVE DRAINAGE AWAY FROM ALL BUILDINGS AND TO DRAINAGE STRUCTURES OR DITCHES. NATURAL FLOW OF SURROUNDING WATERS SHALL NOT BE DISTURBED DURING CONSTRUCTION, UNLESS SHOWN OTHERWISE.

3. ALL TOPSOIL AND EXCAVATED MATERIAL SHALL BE STOCKPILED IN AN APPROVED AREA DURING CONSTRUCTION. EXCESS OR UNSUITABLE TOPSOIL SHALL BE DISPOSED OF OFF-SITE IN A MANNER THAT IS LEGAL AND CONSISTENT WITH ALL LOCAL, STATE AND FEDERAL REQUIREMENTS.

4. BASIS OF BEARING ORIENTATION IS THE GEORGIA STATE PLANE COORDINATE SYSTEM, WEST ZONE BASED ON THE NORTH AMERICAN DATUM OF 1983 (NAD 83). ELEVATIONS SHOWN ARE BASED ON THE NORTH AMERICAN VERTICAL DATUM OF 1988 (NAV 1988) THE CONTRACTOR SHALL BE RESPONSIBLE FOR SETTING AND MAINTAINING A BENCHMARK FOR THE PROJECT, AND FOR ANY REQUIRED ELEVATION TRANSLATION.

5. NO GRADED SLOPE SHALL EXCEED 2H:1V.

6. WALKS TO HAVE MAXIMUM CROSS SLOPE OF 2.0%.

7. SOILS ARE NOT TO BE DISTURBED BY HEAVY EQUIPMENT NOR SHALL STREAMS BE PIPED BY TEMPORARY OR PERMANENT CULVERTS.

8. ALL BACKFILL AND FILL MATERIAL SHALL BE FREE OF ORGANIC MATTER AND WASTE.

9. CONTRACTOR SHALL INSTALL ALL PERIMETER EROSION AND SEDIMENTATION CONTROL MEASURES PRIOR TO ANY SITE CLEARING OR EXCAVATION.

10. ALL CONTRACTORS/SUBCONTRACTORS THAT WILL BE ENGAGED IN LAND DISTURBING ACTIVITIES SHALL COMPLY WITH ALL EROSION, SEDIMENTATION AND POLLUTION CONTROL AND STORMWATER POLLUTION PREVENTION REQUIREMENTS CONTAINED THROUGHOUT THE DRAWINGS, SPECIFICATIONS, AND PERMITS.

11. AREAS DISTURBED BY THE CONTRACTOR, WHICH ARE NOT PART OF THIS PROJECT, SHALL BE RETURNED TO ORIGINAL, OR BETTER CONDITION, PRIOR TO THE COMPLETION OF THE PROJECT AS DETERMINED BY THE OWNER AND OWNER'S REPRESENTATIVE AND WILL BE THE RESPONSIBILITY OF THE CONTRACTOR TO CONTACT PROPERTY OWNER AND PROVIDE APPROPRIATE EROSION CONTROL AND SEDIMENT CONTROL MEASURES, IF REQUIRED.

12. ALL SPOT ELEVATIONS SHOWN ARE FINISHED GRADE.

13. A FIELD VERIFICATION OF HORIZONTAL AND VERTICAL ALIGNMENTS OF WATER LINES SHALL BE PERFORMED BY THE CONTRACTOR BEFORE CONSTRUCTION.

GENERAL SITE DEMOLITION NOTES:

1. ALL DEMOLITION WORK SHALL BE COORDINATED WITH CONTRACTOR'S SCHEDULE, LOGISTICS PLAN (APPROVED BY OWNER), EROSION, SEDIMENTATION AND POLLUTION CONTROL PLAN PRIOR TO WORK.

2. CONTRACTOR SHALL ESTABLISH SURVEY CONTROL NETWORK OUTSIDE LIMITS OF DEMOLITION PRIOR TO COMMENCEMENT OF WORK. THIS WORK MUST BE PERFORMED BY A GEORGIA LICENSED LAND SURVEYOR.

3. THE CONTRACTOR SHALL SUBMIT A DETAILED DEMOLITION PROCEDURE TO THE OWNER FOR APPROVAL AT LEAST 10 DAYS BEFORE DEMOLITION IS TO BEGIN. THE DEMOLITION PROCEDURE SHALL INCLUDE A DETAILED DESCRIPTION OF THE METHODS AND EQUIPMENT TO BE USED FOR EACH OPERATION AND THE SEQUENCE OF WORK.

4. THE CONTRACTOR SHALL DEMOLISH AND REMOVE ALL EXISTING PAVEMENT, UTILITIES, EQUIPMENT, ETC. NOTED TO BE REMOVED WITHIN THE DEMOLITION LIMITS AS SHOWN ON THE PLANS.

5. "DEMOLISH" SHALL MEAN TO REMOVE AN OBJECT IN ITS ENTIRETY. RESTORE GRADES AND SURFACE IMPROVEMENTS TO MATCH EXISTING CONDITIONS OR PER REQUIREMENTS OF NEW WORK, WHICHEVER IS APPLICABLE.

6. CONTRACTOR TO PROVIDE AND MAINTAIN NECESSARY FENCES, BARRICADES, LIGHTS, SIGNS AND OTHER TRAFFIC CONTROL MEASURES AS REQUIRED FOR THE PROTECTION AND SAFETY OF THE PUBLIC THROUGHOUT THE DEMOLITION AND CONSTRUCTION ACTIVITIES ON THE SITE.

7. CONTRACTOR SHALL LOCATE ALL EXISTING UTILITIES PRIOR TO THE START OF DEMOLITION ACTIVITIES.

8. THE CONTRACTOR SHALL BE RESPONSIBLE FOR REMOVING ALL EXISTING SERVICE CONNECTIONS TO BE REMOVED FROM THE SITE AND PERMANENTLY PLUGGING THE PIPES WHERE REQUIRED IN ACCORDANCE WITH THE REQUIREMENTS OF THE UTILITY COMPANIES CONCERNED.

9. CONTRACTOR SHALL COORDINATE WITH THE UTILITY COMPANY FOR THE RELOCATION OF ANY UTILITY TO REMAIN IN SERVICE. CONTRACTOR TO EXERCISE EXTREME CAUTION WHEN CONSTRUCTION OCCURS NEAR EXISTING UTILITIES.

10. CONTRACTOR SHALL SAWCUT TO FULL PAVEMENT, SIDEWALK AND CURB AND GUTTER DEPTH AT THE LIMIT OF DEMOLITION FOR REMOVAL OF PAVEMENT, SIDEWALK AND CURB AND GUTTER. CURB AND GUTTER DEMOLISHED AT NEAREST JOINT.

11. ALL EXISTING PIPE TO BE ABANDONED SHALL BE CUT, AND PLUGGED OR CAPPED AT EACH END. WHERE EXISTING PIPING INTERFERES WITH NEW PIPING OR CONSTRUCTION, IT SHALL BE REMOVED BEYOND THE LIMITS REQUIRED FOR THE PROPER COMPLETION OF THE WORK AND THE OPEN ENDS PLUGGED OR CAPPED. UNLESS OTHERWISE SHOWN, LINES SHALL BE PLUGGED OR CAPPED AT LEAST 12-INCHES BEHIND OR BELOW FINISH BUILDING SURFACES AND AT LEAST 12 INCHES BELOW PROPOSED GRADE SURFACES

12. CONTRACTOR TO MOVE ALL CONSTRUCTION DEBRIS OFF THE PROPERTY AND DISPOSE DEBRIS AT A LEGAL, PERMITTED LANDFILL CONSISTENT WITH ALL LOCAL, STATE, AND FEDERAL REQUIREMENTS.

13. CONTRACTOR TO VISIT THE SITE AND COMPLETELY UNDERSTAND THE SCOPE OF WORK AND THE LIMITS OF CONSTRUCTION/ DISTURBANCE PRIOR TO ANY DEMOLITION.

14. CONTRACTOR SHALL REPAIR OR REPLACE ANY EXISTING ITEMS TO REMAIN AND BE PROTECTED THAT ARE DAMAGED DURING CONSTRUCTION AT NO ADDITIONAL COST TO OWNER.

15. CONTRACTOR SHALL PROTECT EXISTING PAVED SURFACES TO REMAIN FROM DAMAGE.CONTRACTOR SHALL PROTECT EXISTING STORM DRAINAGE SYSTEM FROM SEDIMENTATION AND SHALL FLUSH EXISTING STORM SYSTEM ONCE DISTURBED AREAS HAVE BEEN STABILIZED. ANY SEDIMENT REMOVED SHALL BE DISPOSED OF OFF-SITE PER STATE AND LOCAL REGULATIONS.

16. CONTRACTOR SHALL REMOVE ALL DEMOLISHED MATERIALS (PIPING AND APPURTENANCES) FROM TOP SOIL PRIOR TO STOCKPILING.

EROSION, SEDIMENTATION, AND POLLUTION CONTROL NOTES:

1. REFER TO CE-SERIES FOR ADDITIONAL NOTES, PLANS, AND DETAILS.

PERMIT SET

SANDY SPRINGS
GEORGIA

GEORGIA REGISTERED LANDSCAPE ARCHITECT No. 1339 ROBERT BRADLEY JONES
GSWCC: #31792
10/21/2019 SEAL

MARK	DESCRIPTION	DATE	APPR.
0	BID SET	2019.10.16	

DESIGNED BY: PBT | DATE: OCTOBER 16, 2019
DWN BY: PBT | CKD BY: RBJ | SOLICITATION NO.: -
SUBMITTED BY: PBT | CONTRACT NO.: -
FILE NAME: C-001.dwg | FILE NUMBER: -
SIZE: 22" X 34" | PLOT SCALE: 1:1 | PLOT DATE: 10/21/2019

CITY OF SANDY SPRINGS
1 GALAMBOS WAY
SANDY SPRINGS, GA 30328

POND
3500 Parkway Lane
Norcross, Georgia 30092
Phone 678.336.7740
Fax 678.336.7744
POND PROJECT No.1190708

HERITAGE PARK IMPROVEMENTS

GENERAL CIVIL NOTES

SHEET IDENTIFICATION NUMBER
C-001

FILE PATH: \\ACP2SERVER\RESOURCES\PROJECTS\FY19\1190708\04.CAD_BIM\04.02.CADIC-001.DWG PLOTTED BY: JONES, BRAD

CIVIL GENERAL NOTES CONT.:

FULTON COUNTY SANITARY SEWER NOTES:

1. ALL WASTEWATER PIPE CONSTRUCTION SHOWN ON THESE PLANS MUST CONFORM TO FULTON COUNTY'S STANDARDS AND SPECIFICATIONS, INCLUDING SANITARY SEWER REGULATIONS LATEST COPY.

D 2. CONTRACTOR MUST FIELD VERIFY THE LOCATION AND ELEVATION OF ALL KNOWN AND UNKNOWN UNDERGROUND UTILITIES.

3. ALL TEMPORARY AND PERMANENT WASTEWATER EASEMENTS MUST BE DRESSED AND GRASSED TO CONTROL EROSION PRIOR TO ACCEPTANCE. TREES SHALL NOT BE PLANTED IN THE PERMANENT EASEMENT AREA, OR WITHIN 5-FEET OF ANY UTILITY LINES.

4. AS-BUILT DRAWINGS AND MAINTENANCE BOND(S) MUST BE SUBMITTED AND ARE REQUIRED PRIOR TO INSPECTION AND ACCEPTANCE. DIGITAL AS-BUILT WILL BE REQUIRED. NOTE THAT DIGITAL AS-BUILTS WILL BE REQUIRED AT THE COMPLETION OF THE PROJECT. PLEASE SEE: HTTP://WWW.FULTONCOUNTYGA.GOV/IMAGES/STORIES /WR/DEVELOPMENT/CAD_STANDARDS.PDF FOR THE REQUIREMENTS. MAINTENANCE BONDS ARE DUE AT FINAL APPROVAL OF THE AS-BUILTS.

5. NEOPRENE COUPLINGS WITH STAINLESS STEEL BANDS AND SHEAR RINGS ARE REQUIRED FOR JOINING DIFFERENT TYPES OF SANITARY SEWER PIPES.

C 6. POOLS SHALL NOT DRAIN INTO WASTEWATER PIPE SYSTEMS. POOLS SHALL DRAIN INTO AN APPROVED INDIVIDUAL ONSITE WASTEWATER MANAGEMENT SYSTEM.

7. LOW PRESSURE AIR TESTING REQUIRED FOR ALL WASTEWATER PIPE SYSTEMS. THIS TEST MUST MEET ALL REQUIREMENTS AS OUTLINED IN UNI-B-06 OR CURRENT REVISION. A FULTON COUNTY INSPECTOR MUST BE PRESENT DURING TESTING.

8. ISSUANCE OF THIS PERMIT DOES NOT IN ANY WAY IMPLY THAT WASTEWATER TAPS FOR BUILDING PERMITS WILL BE ISSUED. CONTACT THE DEPARTMENT OF PUBLIC WORKS, WATER RESOURCES DIVISION AT (404) 612-7400 FOR FURTHER INFORMATION.

9. CONTRACTOR SHALL FIELD VERIFY THE LOCATIONS AND INVERT ELEVATIONS OF WASTEWATER PIPES FOR A CONNECTION TO EXISTING WASTEWATER SYSTEMS.

10. ANY CHANGES TO THE SEWER DRAWINGS MUST BE APPROVED BY FULTON COUNTY.

B 11. FOR ALL PROJECTS UTILIZING INDIVIDUAL ONSITE WASTEWATER MANAGEMENT SYSTEMS DESIGN AND PROVISIONS SHALL BE IN CONFORMANCE WITH FULTON COUNTY DEPARTMENT OF HEALTH AND WELLNESS REGULATIONS.

12. USF 7635 BOX REQUIRED FOR WASTEWATER CLEANOUTS IN PAVED AREA PER FULTON COUNTY STANDARD DETAIL 709.

13. COMPACTION OF THE BACK FILL OF ALL TRENCHES SHALL BE COMPACTED TO AT LEAST 90% STANDARD PROCTOR DENSITY. BACKFILL MATERIAL SHALL BE FREE FROM ROOTS, STUMPS, OR OTHER FOREIGN DEBRIS, AND SHALL BE PLACED AT OR NEAR OPTIMUM MOISTURE CONTENT. CORRECTION OF ANY TRENCH SETTLEMENT WITHIN A YEAR FROM THE DATE OF APPROVAL WILL BE THE RESPONSIBILITY OF THE CONTRACTOR. COMPACTION OF THE BACK FILL OF ALL TRENCHES LOCATED UNDER PAVEMENT SHALL BE COMPACTED TO AT LEAST 95% STANDARD PROCTOR DENSITY.

14. SANITARY SEWER LATERALS SHOULD BE MARKED WITH 4"X4"POST WITH MIN. 4-FEET ABOVE GROUND. THE TOP 1' SHOULD BE PAINTED GREEN. EACH LATERAL IS TO BE BROUGHT TO THE GROUND SURFACE IN ACCORDANCE WITH FULTON COUNTY STANDARD 909.

A 15. ALL REQUIRED OFF SITE EASEMENTS SHALL BE DEDICATED TO FULTON COUNTY PRIOR TO UTILITY PERMITTING. ALL PUBLIC ON- SITE EASEMENTS FOR OTHER THAN SINGLE FAMILY RESIDENTIAL PROJECTS THAT WILL BE FINAL PLATTED SHALL BE DEDICATED TO FULTON COUNTY PRIOR TO WATER RESOURCES PERMIT APPROVAL.

16. FOR ALL PROJECTS CONTAINING PVC WASTEWATER PIPES, ALSO INCLUDE THE FOLLOWING NOTES: (SEE ATTACHED CONDITION FOR PVC).

a. PIPE SHALL BE ASTM D3034, SDR35 IN 12.5 FOOT LAYING LENGTHS WITH ELASTOMERIC SEALED JOINTS IN ACCORDANCE WITH ASTM D3212.

b. PIPE BEDDING SHALL BE #57, SHARP, ANGULAR, CRUSHED STONE. BEDDING SHALL EXTEND A MINIMUM OF 4" BELOW THE PIPE AND EXTEND TO THE TOP OF THE PIPE. THE BEDDING SHALL BE COMPACTED BY ``SLICING WITH A FLAT SHOVEL". THE WIDTH OF THE DITCH MUST BE IN ACCORDANCE WITH OSHA SAFETY STANDARDS.

c. INITIAL BACKFILL: AFTER BEDDING, COMPLETE INITIAL BACKFILL WITH #57 STONE. IF NO ROCK IS ENCOUNTERED, INITIAL BACKFILL SHALL EXTEND TO A HEIGHT 6" ABOVE OF THE TOP OF THE PIPE, OTHERWISE INITIAL BACKFILL SHALL EXTEND TO 12" ABOVE THE TOP OF THE PIPE.

d. FITTINGS FOR LATERAL CONNECTIONS SHALL BE 45° WYES AND BENDS. PROVIDE PVC PIPE STOPPERS FOR EACH LATERAL. PROVIDE SPECIAL WATERTIGHT CONNECTIONS AT MANHOLES AND TRANSITIONS TO DUCTILE IRON PIPE AS RECOMMENDED BY THE PIPE MANUFACTURER.

e. AFTER INSTALLATION, A DEFLECTION TEST IS REQUIRED. INITIAL DEFLECTION SHALL BE LIMITED TO 3% OF THE UNDEFLECTED DIAMETER. A SECOND TEST SHALL BE MADE AT LEAST 8 MONTHS AFTER THE INSTALLATION BUT BEFORE FINAL ACCEPTANCE. AT THAT TIME DEFLECTION SHALL BE LIMITED TO 5% OF THE UNDEFLECTED DIAMETER.

17. ALL MANHOLES LOCATED WITHIN A PAVED AREA SHALL HAVE CONCENTRIC CONE SECTIONS AND FLANGE DOWN FRAMES AND COVERS. ALL MANHOLES LOCATED WITHIN AN UNPAVED AREA SHALL HAVE ECCENTRIC CONE SECTIONS WITH BOLT DOWN FLANGE UP FRAME AND COVERS, OR HINGED CAST IN PLACE LOCKABLE COVERS. ALL MANHOLES LOCATED WITHIN A FLOOD PRONE AREA SHALL HAVE ECCENTRIC CONE SECTIONS WITH BOLT DOWN GASKETED FLANGE UP FRAME AND COVERS. RAISE TOP OF MANHOLES IN LANDSCAPE AREAS TO 0.5-FEET ABOVE GRADE.

18. NOTIFY FULTON COUNTY INSPECTOR 24-HOURS PRIOR TO CONSTRUCTION.

SYMBOLS LEGEND

NEW	DESCRIPTION
	DEMOLISH AND REMOVE EXISTING ASPHALT AND CONCRETE PAVEMENT
LOD LOD	LIMITS OF DISTURBANCE
	DEMOLISH SITE UTILITY
X	DEMOLISH SITE FEATURE
	EXISTING CONTOUR
	PROPOSED CONTOUR
	SURFACE FLOW DIRECTION
+1090.5	SPOT ELEVATION
W W	NEW WATER LINE- 3/4" COPPER DOM
	WATER METER
	WATER VALVE
	SIGN

PERMIT SET

SANDY SPRINGS GEORGIA

GEORGIA REGISTERED No. 1339 LANDSCAPE ARCHITECT ROBERT BRADLEY JONES

GSWCC: #31792
10/21/2019 SEAL

MARK	DESCRIPTION	DATE	APPR.
0	BID SET	2019.10.16	

DESIGNED BY: PBT
DWN BY: PBT
CKD BY: RBJ
SUBMITTED BY: PBT
DATE: OCTOBER 16, 2019
SOLICITATION NO.: -
CONTRACT NO.: -
FILE NUMBER: -
FILE NAME: C-002.dwg
SIZE: 22" X 34"
PLOT SCALE: 1:1
PLOT DATE: 10/21/2019

CITY OF SANDY SPRINGS
1 GALAMBOS WAY
SANDY SPRINGS, GA 30328

POND
3500 Parkway Lane
Peachtree Corners, GA
30092 USA 30360
Phone 678.336.7140
Fax 678.336.7744
POND PROJECT No. 1190708

HERITAGE PARK IMPROVEMENTS

GENERAL CIVIL NOTES

SHEET IDENTIFICATION NUMBER
C-002

FILE PATH: \\ACP3SERVER\RESOURCES\PROJECTS\FY19\1190708\04.CAD_BIM\04.02.CADIC-001.DWG PLOTTED BY: JONES, BRAD

LEGEND

- PROPERTY LINE
- FENCE
- WOODS/HEDGE LINE
- CONTOUR
- STORM WATER LINE
- OVERHEAD ELECTRIC
- OVERHEAD TELEPHONE
- OVERHEAD FIBER
- OVERHEAD CABLE TV
- UNDERGROUND TELEPHONE
- UNDERGROUND TELEPHONE
- UNDERGROUND ELECTRIC
- UNDERGROUND CABLE TV
- TRAFFIC SIGNAL WIRE
- GAS LINE
- WATER LINE
- SANITARY SEWER
- UNKNOWN UTILITY
- LAND LOT
- BENCHMARK
- IRON PIN FOUND
- SANITARY MANHOLE
- STORM WATER MANHOLE
- TELEPHONE MANHOLE
- UTILITY POLE
- TRANSMISSION POLE
- WATER MARKER/MONUMENT
- WATER MARKER VAULT
- FIRE HYDRANT
- WATER VALVE
- WATER METER
- ELECTRIC METER
- SIGN
- GAS MARKER
- GAS VALVE
- GAS METER
- GAS TEST STATION
- TELEPHONE/FIBER BOX
- FIBER MARKER
- TELEPHONE PEDESTAL
- LIGHT POLE/POST
- TELEPHONE MANHOLE
- R/W MARKER
- CYPRESS TREE
- PINE TREE
- HARDWOOD TREE
- MAGNOLIA TREE
- BUSH/SHRUB
- ORNAMENTAL
- INTERSTATE 75

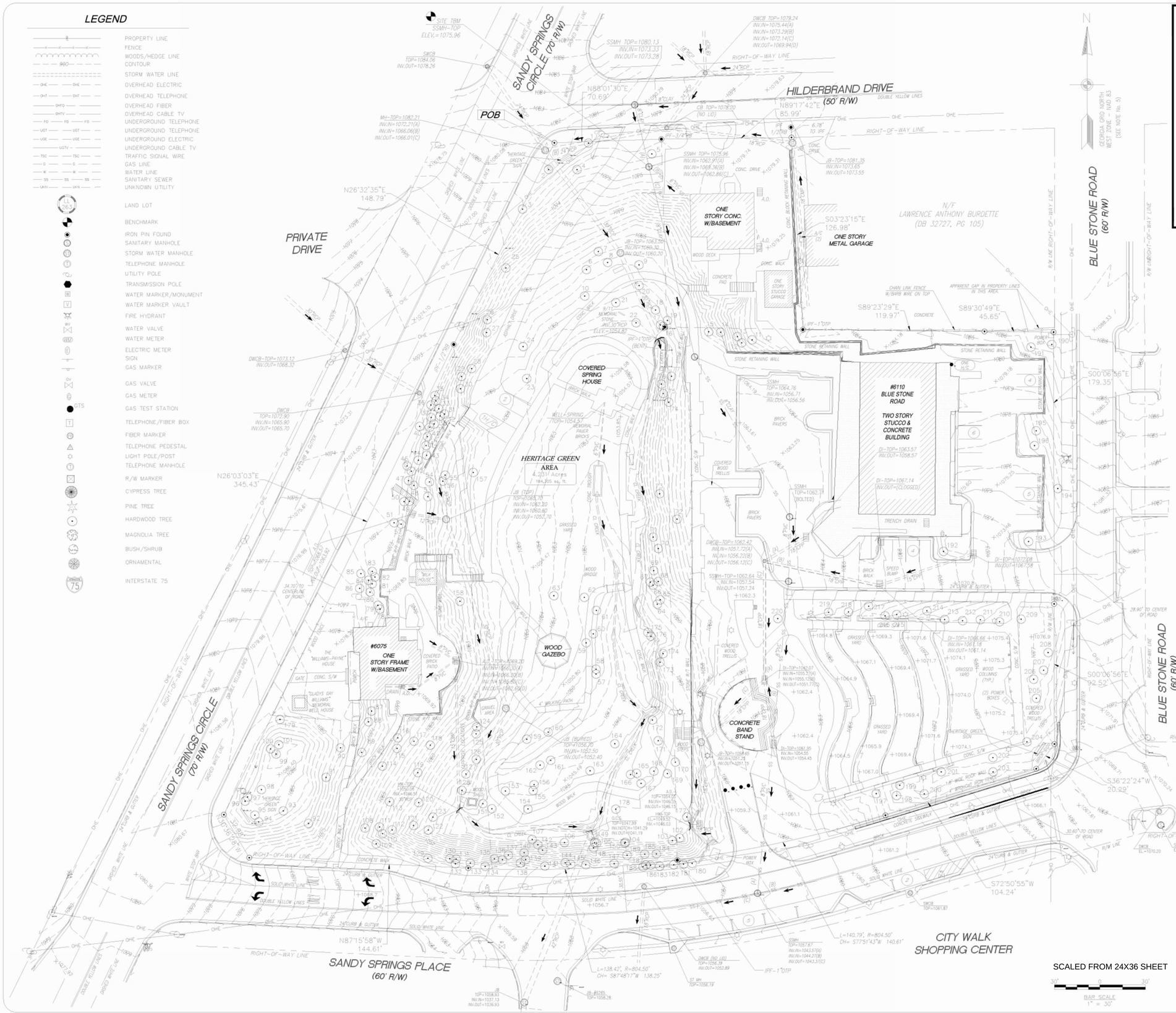

SCALED FROM 24X36 SHEET

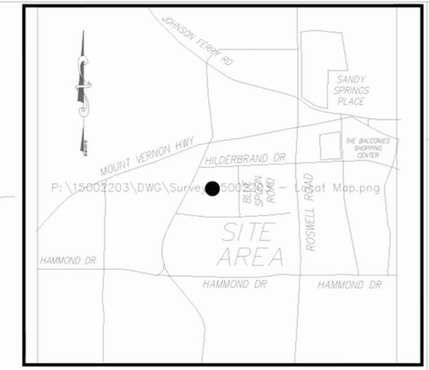

VICINITY MAP

N.T.S.

REFERENCES

1. QUITCLAIM DEED AND RESTRICTIVE COVENANTS – SANDY SPRINGS HISTORICAL AREA (INCLUDING WILLIAMS–PAYNE HOUSE), FROM FULTON COUNTY TO THE CITY OF SANDY SPRINGS. DATED DECEMBER 8TH, 2006, RECORDED IN DEED BOOK 44050, PAGE 668, FULTON COUNTY RECORDS.
2. "SURVEY FOR FULTON COUNTY", PREPARED BY LEE BARGER & ASSOC., INC. WOODSTOCK, GEORGIA. DATED AUGUST 10, 2001, REVISED MARCH 11, 2002. RECORDED IN PLAT BOOK 227, PAGE 14, AFORESAID RECORDS.
3. "SURVEY FOR HUTCHINSON RENTAL SERVICES, INC.", PREPARED BY METRO ENGINEERS, ATLANTA, GA, DATED MARCH 8, 1983, RECORDED IN PLAT BOOK 129, PAGE 27, AFORESAID RECORDS.
4. DEED BOOK 44050, PAGE 676, FOR #109 SANDY SPRINGS PLACE, REFERENCE PLAT BY URBAN ENGINEERS, INC., DATED FEBRUARY 4, 1985.
5. DEED BOOK 44050, PAGE 682, FOR SANDY SPRINGS CIRCLE – AREA 0.745 ACRES. REFERENCE SURVEY BY URBAN ENGINEERS, INC., DATED FEBRUARY 4, 1985.

SURVEY NOTES

1. THE FIELD DATA UPON WHICH THIS SURVEY IS BASED HAS A CLOSURE OF ONE FOOT IN 41,949 FEET AND AN ANGULAR ERROR OF 01" PER ANGLE POINT, AND WAS ADJUSTED USING THE LEAST SQUARES METHOD.
2. THIS PLAT HAS BEEN CALCULATED FOR CLOSURE AND IS FOUND TO BE ACCURATE WITHIN ONE FOOT IN 208,866 FEET.
3. FIELD WORK FOR THIS SURVEY WAS PERFORMED BY ATWELL, LLC DURING THE MONTH OF OCTOBER AND NOVEMBER OF 2015.
4. THE LINEAR AND ANGULAR MEASUREMENTS SHOWN ON THIS PLAT WERE OBTAINED BY FIELD SURVEY USING A TRIMBLE S8 ROBOTIC TOTAL STATION, AND A TRIMBLE R6 GPS RECEIVER.
5. BASIS OF BEARING ORIENTATION IS THE GEORGIA STATE PLANE COORDINATE SYSTEM, WEST ZONE BASED ON THE NORTH AMERICAN DATUM OF 1983 (NAD 83) AND THE VERTICAL DATUM IS BASED ON THE NORTH AMERICAN VERTICAL DATUM OF 1988 (NAVD88) PER GPS OBSERVATIONS ON SITE BY LAI ENGINEERING, AUGUST 2010 USING THE eGPS STATEWIDE RTK NETWORK.
6. ALL UNDERGROUND UTILITIES SHOWN ARE BASED UPON FIELD OBSERVATIONS AND VISIBLE MARKINGS FOUND BY SPG SURVEYING, LLC. CONTRACTOR SHOULD VERIFY ALL UTILITIES BEFORE ANY CONSTRUCTION BEGINS.

SURVEYOR'S CERTIFICATION

THIS SURVEY WAS PREPARED IN CONFORMITY WITH THE TECHNICAL STANDARDS FOR PROPERTY SURVEYS IN GEORGIA AS SET FORTH IN CHAPTER 180–7 OF THE RULES OF THE GEORGIA BOARD OF REGISTRATION FOR PROFESSIONAL ENGINEERS AND LAND SURVEYORS AND AS SET FORTH IN THE GEORGIA PLAT ACT O.C.G.A. 15–6–67.

GEORGIA REGISTERED No. 2845 LAND SURVEYOR STEVEN P. GRIGGS

STEVEN P. GRIGGS DATE
GEORGIA REGISTERED LAND SURVEYOR
REGISTRATION NUMBER 2845

BOUNDARY & TOPOGRAPHIC SURVEY OF HERITAGE PARK - #6110 Blue Spoon Road, Land Lot 89, Of The 17th District, City of Sandy Springs, Fulton County, GA

For: The City of Sandy Springs
7840 Roswell Road, Sandy Springs, GA 30350

REVISIONS	BY:	DATE:

DATE	
NOVEMBER 27, 2015	
Drawn By:	SG
Approved By:	SG
Reviewed By:	SG
Project No. 201531.001	

1025 Winding Creek Trail, Atlanta, Georgia 30328
Phone (404) 557-2170 Fax (404) 252-5935

V-101

TREE TABLE

Pt #	Description	Northing	Easting	Elevation
1	15"MAPLE	1427006.9840	2230949.1570	1080.68
2	13"MAPLE	1426999.5550	2230922.8370	1080.65
3	9"MAPLE	1426963.3590	2230935.5710	1078.91
4	10"MAGNOLIA	1426989.4660	2230941.5540	1076.31
5	13"MAPLE	1426999.8110	2230990.9750	1077.44
6	26"OAK	1426923.4190	2230947.7720	1062.76
7	27"OAK	1426935.3530	2230955.6290	1064.32
8	26"OAK	1426928.1370	2230961.7570	1062.30
9	10"DECO	1426926.5570	2230982.4970	1062.11
10	30"OAK	1426905.9740	2230946.6230	1060.66
11	8"OAK	1426877.0250	2231057.2110	1078.22
12	6"HARDWOOD	1426875.0860	2231050.3440	1075.38
13	21"OAK	1426879.1770	2231047.5030	1075.01
14	9"HARDWOOD	1426883.0230	2231036.4410	1068.62
15	15"POPLAR	1426882.3890	2231028.5160	1065.93
16	9"POPLAR	1426885.9160	2230998.5050	1059.53
17	15"POPLAR	1426886.9120	2230996.6600	1059.02
18	10"POPLAR	1426896.7590	2230993.4270	1059.45
19	14"POPLAR	1426889.8720	2231001.2610	1060.68
20	14"HARDWOOD	1426912.8790	2230982.5930	1060.36
21	9"OAK	1426901.6320	2230967.1970	1059.58
22	9"OAK	1426888.2900	2230980.5550	1057.85
23	22"HARDWOOD	1426851.4780	2230908.3430	1059.27
24	9"OAK	1426872.5860	2230905.9530	1061.82
25	24"POPLAR	1426924.5230	2230894.5540	1070.38
26	10"HARDWOOD	1426890.3880	2230882.2040	1065.12
27	12"OAK	1426881.8890	2230881.7910	1063.66
28	14"OAK	1426858.0550	2230871.9240	1063.12
29	27"OAK	1426852.8760	2230865.2150	1065.35
30	10"HARDWOOD	1426844.7700	2230864.5900	1064.29
31	12"PINE	1426828.0520	2230853.9990	1068.18
32	10"PINE	1426836.7720	2230851.0970	1068.94
33	11"PINE	1426831.5140	2230850.2830	1069.84
34	10"SWEETGUM	1426836.7260	2230848.3460	1071.65
35	10"PINE	1426840.2730	2230847.6810	1072.53
36	14"PINE	1426834.0190	2230845.0470	1073.02
37	10"PINE	1426825.8060	2230845.1880	1071.00
38	12"PINE	1426821.5090	2230847.0980	1070.16
39	11"PINE	1426819.3710	2230844.2580	1070.54
40	8"SWEETGUM	1426819.9180	2230837.6080	1073.15
41	11"PINE	1426813.1540	2230842.7810	1069.65
42	10"PINE	1426807.2400	2230841.8120	1069.53
43	10"PINE	1426800.8210	2230842.1880	1068.90
44	14"PINE	1426797.5320	2230836.7510	1070.97
45	9"PINE	1426790.3100	2230832.0870	1071.68
46	8"SWEETGUM	1426793.8000	2230829.3350	1072.96
47	16"PINE	1426784.0830	2230830.2770	1071.94
48	8"PINE	1426780.9060	2230833.7780	1070.44
49	9"PINE	1426770.3690	2230830.8370	1070.89
50	18"PINE	1426770.2420	2230827.5970	1072.25
51	21"PINE	1426756.4010	2230820.7120	1073.90
52	18"PINE	1426755.5150	2230825.3820	1072.82
53	16"PINE	1426773.4750	2230843.0110	1068.22
54	13"PINE	1426783.2540	2230844.0610	1067.34
55	15"PINE	1426787.7160	2230854.4480	1064.26
56	15"PINE	1426783.7060	2230852.8970	1064.37
57	19"POPLAR	1426656.4750	2230954.1030	1049.86
58	18"BIRCH	1426659.6960	2230954.1250	1050.01
59	10"OAK	1426677.1130	2230947.5820	1050.76
60	12"POPLAR	1426683.0640	2230952.2770	1050.43
61	18"OAK	1426698.5150	2230954.3440	1050.31
62	34"OAK	1426707.1390	2230946.3780	1050.73
63	18"OAK	1426708.2530	2230926.2630	1052.39
64	12"BIRCH	1426703.6250	2230994.5170	1049.59
65	10"HARDWOOD	1426705.5250	2230996.5060	1049.90
66	23"OAK	1426715.1770	2230991.7700	1051.42
67	8"OAK	1426711.1960	2230989.9870	1050.10
68	25"OAK	1426717.6040	2230995.2170	1052.24
69	11"POPLAR	1426724.7760	2230992.2260	1052.19
70	23"OAK	1426739.4190	2230995.2210	1054.07
71	9"OAK	1426746.9430	2230991.8680	1053.25
72	18"OAK	1426758.7840	2231007.6020	1060.40
73	17"POPLAR	1426775.4020	2230996.1130	1056.99
74	26"OAK	1426835.8620	2231002.1500	1059.75
75	12"SWEETGUM	1426841.5960	2230998.4970	1056.15
76	17"POPLAR	1426847.8340	2230997.2480	1054.62
77	11"SWEETGUM	1426852.9820	2231003.9200	1059.30
78	18"PINE	1426899.3750	2230811.3880	1075.16
79	13"OAK	1426701.9160	2230810.0000	1074.71
80	11"OAK	1426710.6040	2230804.8190	1074.24
81	11"OAK	1426716.0910	2230806.2110	1073.61
82	8"OAK	1426720.5850	2230808.0640	1073.43
83	13"OAK	1426724.2720	2230806.2760	1073.70
84	10"OAK	1426718.4390	2230803.7750	1074.61
85	11"OAK	1426723.8370	2230798.8020	1075.49
86	12"OAK	1426713.0560	2230797.9820	1076.40
87	8"HICKORY	1426632.0660	2230805.8350	1074.83
88	12"HARDWOOD	1426624.9540	2230803.8050	1075.69
89	11"OAK	1426634.7550	2230799.3270	1074.32
90	27"OAK	1426607.8120	2230785.3540	1078.37
91	27"OAK	1426588.2470	2230775.9200	1078.96
92	28"OAK	1426557.8030	2230764.2720	1080.26
93	19"OAK	1426566.1680	2230747.6950	1085.06
94	19"PINE	1426558.8810	2230731.4280	1085.15
95	14"PINE	1426563.3370	2230728.9130	1085.37
96	14"PINE	1426572.5520	2230722.4440	1086.09
97	11"PINE	1426575.3480	2230724.0810	1085.51
98	15"PINE	1426580.1880	2230733.2130	1086.93
99	14"PINE	1426603.6540	2230743.9410	1088.15
100	16"PINE	1426607.0420	2230739.3140	1087.17

TREE TABLE

Pt #	Description	Northing	Easting	Elevation
101	11"PINE	1426609.8670	2230744.7230	1087.74
102	10"HARDWOOD	1426548.2840	2231009.3470	1046.17
103	12"HARDWOOD	1426546.5320	2231014.5580	1045.75
104	13"HARDWOOD	1426545.5550	2230973.4480	1045.70
105	17"HARDWOOD	1426544.8760	2230954.5200	1046.25
106	7"HARDWOOD	1426545.2160	2230933.2710	1045.89
107	7"HARDWOOD	1426547.2560	2230911.9740	1045.46
108	10"HARDWOOD	1426554.8070	2230801.4930	1066.34
109	14"HARDWOOD	1426544.4100	2230808.8980	1065.75
110	9"HARDWOOD	1426551.1150	2230813.1220	1061.57
111	6"OAK	1426555.5020	2230819.1.360	1062.56
112	8"HARDWOOD	1426553.5710	2230819.4590	1059.82
113	9"OAK	1426572.2060	2230817.8000	1062.70
114	15"OAK	1426595.6690	2230813.0080	1068.71
115	15"OAK	1426607.4150	2230822.6510	1067.60
116	15"OAK	1426614.3280	2230823.1630	1068.71
117	21"OAK	1426612.1290	2230833.8280	1065.69
118	15"OAK	1426608.5350	2230844.6190	1062.05
119	22"OAK	1426591.3870	2230836.3780	1060.87
120	25"OAK	1426571.6130	2230836.9800	1057.41
121	9"HARDWOOD	1426556.4800	2230835.5300	1055.74
122	19"OAK	1426553.5370	2230843.3220	1051.98
123	6"OAK	1426562.0380	2230846.3850	1051.93
124	7"HARDWOOD	1426621.6430	2230875.2800	1056.18
125	9"HARDWOOD	1426617.0360	2230874.8570	1055.49
126	10"HARDWOOD	1426600.1460	2230875.0140	1051.77
127	33"OAK	1426590.4870	2230868.1610	1052.16
128	14"OAK	1426579.7100	2230865.5480	1050.19
129	10"PINE	1426534.8110	2230843.0190	1062.97
130	11"PINE	1426534.5420	2230857.5410	1059.89
131	6"PINE	1426534.3270	2230861.6690	1059.81
132	9"PINE	1426531.1910	2230861.2470	1062.20
133	10"PINE	1426531.7050	2230871.0770	1060.78
134	13"PINE	1426529.4870	2230880.8410	1061.53
135	10"PINE	1426534.4810	2230886.9660	1056.54
136	9"PINE	1426533.9600	2230892.2830	1056.73
137	15"HARDWOOD	1426536.9860	2230896.1820	1054.29
138	14"PINE	1426531.6760	2230904.1920	1058.64
139	6"PINE	1426533.9670	2230907.6050	1056.45
140	8"HARDWOOD	1426538.5010	2230906.6120	1052.80
141	11"PINE	1426529.6890	2230920.3080	1059.10
142	11"HARDWOOD	1426543.7480	2230915.6670	1048.30
143	17"HARDWOOD	1426540.2330	2230918.7830	1051.04
144	8"PINE	1426531.8750	2230933.7770	1056.28
145	8"PINE	1426531.0130	2230937.2970	1056.71
146	16"PINE	1426530.5780	2230947.3390	1057.48
147	6"PINE	1426531.3070	2230966.0980	1055.96
148	12"HARDWOOD	1426541.7480	2230952.4480	1048.71
149	12"HARDWOOD	1426545.2060	2230953.1930	1046.87
150	10"HARDWOOD	1426544.7710	2230973.9770	1047.30
151	10"HARDWOOD	1426570.8840	2230879.3680	1046.77
152	11"HARDWOOD	1426567.5140	2230885.3230	1046.19
153	10"HARDWOOD	1426579.2700	2230894.2490	1046.21
154	10"HARDWOOD	1426567.4600	2230908.1480	1044.72
155	35"OAK	1426579.5410	2230912.5960	1046.44
156	20"OAK	1426583.4640	2230913.1920	1047.24
157	11"OAK	1426789.4760	2230873.0370	1059.68
158	13"HARDWOOD	1426704.5890	2230864.2360	1063.27
159	10"HARDWOOD	1426613.4640	2230908.3580	1049.85
160	19"OAK	1426618.1420	2230922.5180	1049.33
161	16"HARDWOOD	1426599.5250	2230924.1620	1046.80
162	8"HARDWOOD	1426596.4070	2230917.1470	1047.55
163	6"HARDWOOD	1426592.6160	2230950.1590	1045.26
164	9"HARDWOOD	1426610.5100	2230966.5290	1045.30
165	27"OAK	1426590.9510	2230980.9760	1045.33
166	9"OAK	1426590.1460	2230976.8730	1044.90
167	6"HARDWOOD	1426584.2890	2230983.8880	1044.88
168	11"HARDWOOD	1426592.4150	2230992.3120	1045.40
169	21"OAK	1426590.7870	2231001.2590	1045.84
170	6"OAK	1426598.3350	2231006.5250	1046.70
171	10"HARDWOOD	1426612.4960	2230995.1870	1046.53
172	14"OAK	1426626.1620	2230991.3450	1046.81
173	19"HARDWOOD	1426664.3300	2230996.4040	1048.91
174	22"OAK	1426669.9710	2230998.4040	1049.42
175	16"OAK	1426683.9750	2230988.3560	1048.43
176	11"OAK	1426681.3890	2230990.3970	1048.26
177	15"OAK	1426562.1240	2231014.1060	1047.81
178	24"OAK	1426567.2540	2230967.1790	1045.03
179	9"MAPLE	1426626.4820	2230745.4900	1082.07
180	18"PINE	1426531.4580	2231017.5720	1057.40
181	8"HARDWOOD	1426531.0070	2231011.8540	1057.17
182	8"HARDWOOD	1426530.5010	2231005.3900	1056.99
183	12"PINE	1426529.5710	2230996.1490	1057.12
184	21"HARDWOOD	1426537.7440	2230993.9570	1051.93
185	18"HARDWOOD	1426537.5900	2230986.2570	1052.03
186	9"HARDWOOD	1426530.2040	2230990.0930	1057.11
187	16"PINE	1426530.4170	2230986.9580	1057.13
188	8"PINE	1426529.2370	2230985.1400	1057.05
189	10"HARDWOOD	1426536.8670	2230974.5780	1051.84
190	7"MAPLE	1426873.9510	2231255.1510	1088.24
191	10"OAK	1426872.2410	2231241.3900	1087.09
192	11"MAPLE	1426733.4620	2231183.6390	1072.10
193	7"DECO	1426744.0380	2231239.6110	1077.95
194	16"PINE	1426778.8510	2231259.1200	1081.60
195	19"OAK	1426816.9600	2231244.8370	1081.21
196	12"PINE	1426807.2080	2231243.7350	1080.42
197	12"HARDWOOD	1426577.5610	2231139.2200	1067.51
198	2"HARDWOOD	1426576.2350	2231152.6200	1070.87
199	4"OAK	1426583.1190	2231154.7750	1071.68
200	15"OAK	1426577.3630	2231170.9600	1072.24

TREE TABLE

Pt #	Description	Northing	Easting	Elevation
201	10"OAK	1426591.9320	2231182.1560	1073.77
202	6"HARDWOOD	1426601.3280	2231216.3050	1074.52
203	18"HARDWOOD	1426591.8640	2231216.4290	1073.27
204	14"OAK	1426611.6960	2231238.7970	1075.19
205	36"OAK	1426640.5230	2231244.9940	1077.67
206	22"PINE	1426653.0720	2231243.2340	1077.83
207	16"OAK	1426659.0510	2231249.7990	1077.66
208	18"OAK	1426670.7180	2231252.7720	1077.87
209	12"HARDWOOD	1426692.7250	2231234.9400	1076.27
210	4"CYPRESS	1426691.0580	2231220.6860	1075.61
211	3"HARDWOOD	1426692.3980	2231208.0020	1074.73
212	8"HARDWOOD	1426691.7290	2231196.2450	1074.29
213	6"CYPRESS	1426692.5150	2231184.4070	1073.34
214	4"HARDWOOD	1426698.2670	2231172.6940	1071.61
215	2"HARDWOOD	1426695.7780	2231152.7550	1070.07
216	2"HARDWOOD	1426694.9700	2231145.0470	1069.13
217	8"OAK	1426701.3030	2231134.2110	1067.60
218	6"OAK	1426697.5780	2231120.8890	1066.68
219	4"HARDWOOD	1426697.2960	2231107.7540	1065.11
220	4"MAGNOLIA	1426693.1450	2231074.1330	1062.85

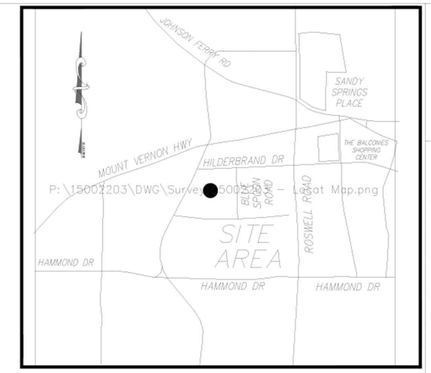

VICINITY MAP

N.T.S.

SURVEYOR'S CERTIFICATION

THIS SURVEY WAS PREPARED IN CONFORMITY WITH THE TECHNICAL STANDARDS FOR PROPERTY SURVEYS IN GEORGIA AS SET FORTH IN CHAPTER 180-7 OF THE RULES OF THE GEORGIA BOARD OF REGISTRATION FOR PROFESSIONAL ENGINEERS AND LAND SURVEYORS AND AS SET FORTH IN THE GEORGIA PLAT ACT O.C.G.A. 15-6-67.

GEORGIA REGISTERED No. 2845 LAND SURVEYOR STEVEN P. GRIGGS

STEVEN P. GRIGGS DATE
GEORGIA REGISTERED LAND SURVEYOR
REGISTRATION NUMBER 2845

BOUNDARY & TOPOGRAPHIC SURVEY OF
HERITAGE PARK - #6110 Blue Spoon Road, Land Lot 89, Of The 17th District, City of Sandy Springs, Fulton County, GA

For:
The City of Sandy Springs
7840 Roswell Road, Sandy Springs, GA 30350

REVISIONS	DATE:	BY:

DATE	
NOVEMBER 27, 2015	
Drawn By: SG	
Approved By: SG	
Reviewed By: SG	
Project No. 201531.001	

1025 Winding Creek Trail, Atlanta, Georgia 30328
Phone (404) 557-2170 Fax (404) 252-5935

V-102

SHEET 2 OF 2

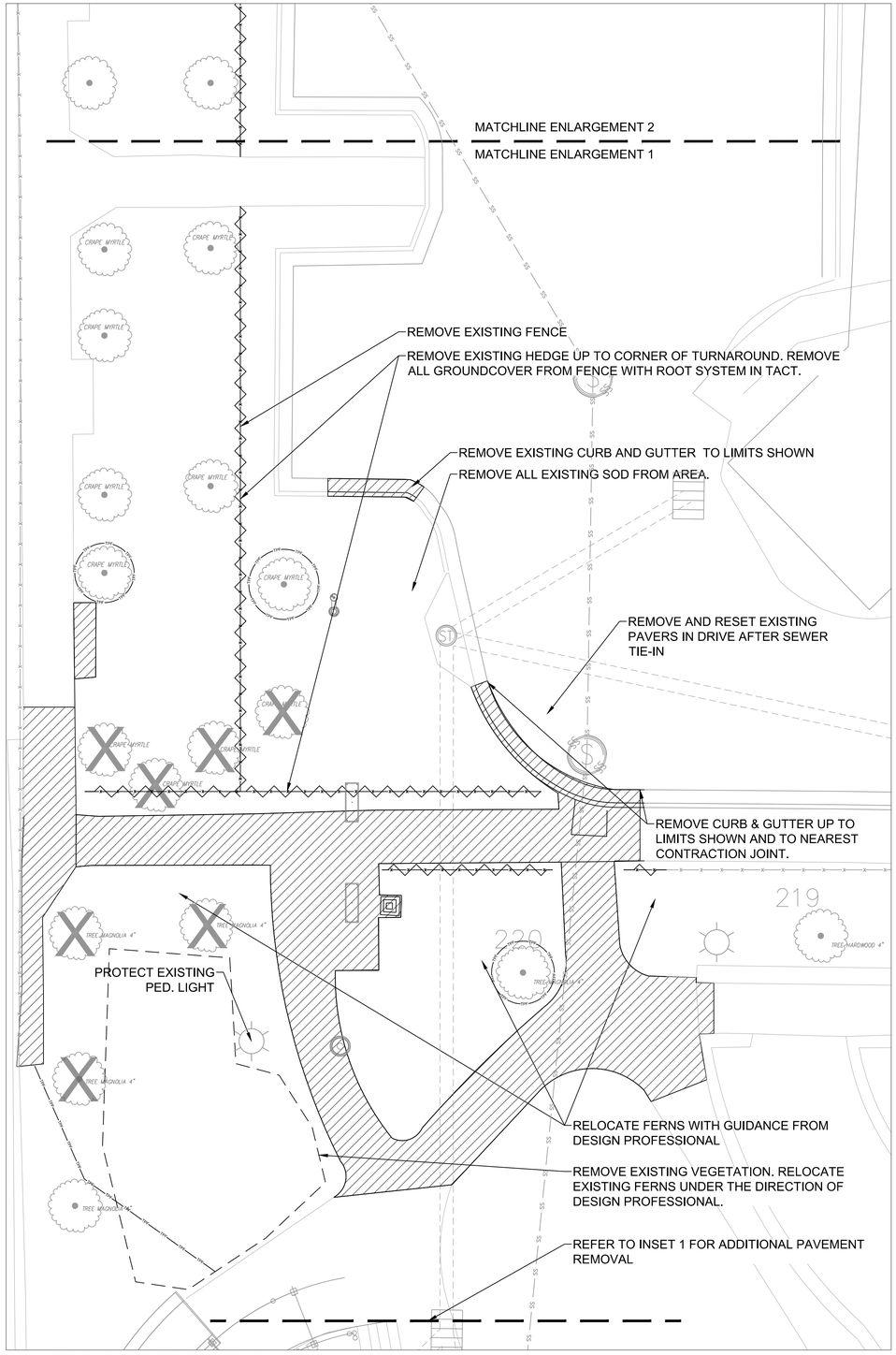

A1 ENLARGEMENT 1
SCALE: 1/8" = 1'-0"

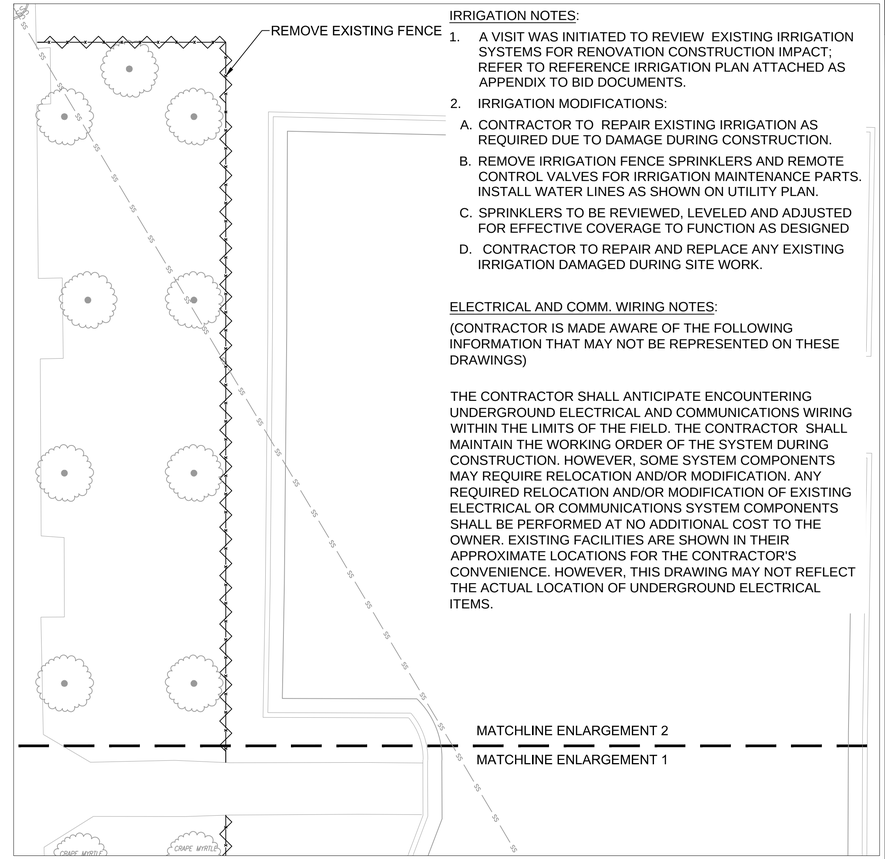

B3 ENLARGEMENT 2
SCALE: 1/8" = 1'-0"

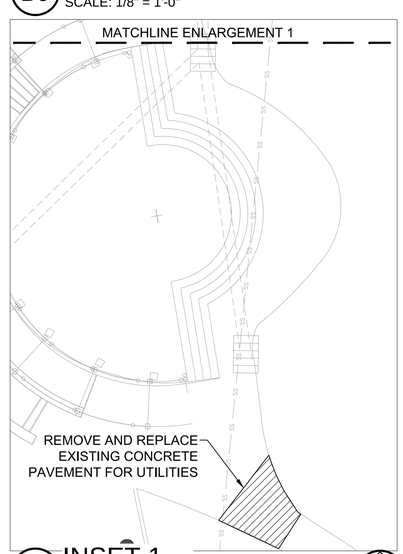

A3 INSET 1
SCALE: N.T.S.

KEY MAP

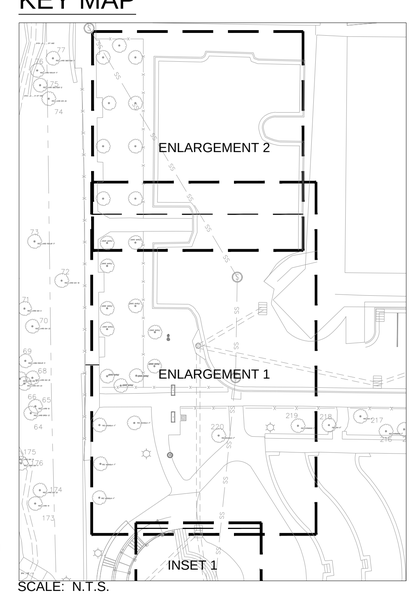

SCALE: N.T.S.

IRRIGATION NOTES:

1. A VISIT WAS INITIATED TO REVIEW EXISTING IRRIGATION SYSTEMS FOR RENOVATION CONSTRUCTION IMPACT; REFER TO REFERENCE IRRIGATION PLAN ATTACHED AS APPENDIX TO BID DOCUMENTS.
2. IRRIGATION MODIFICATIONS:
   A. CONTRACTOR TO REPAIR EXISTING IRRIGATION AS REQUIRED DUE TO DAMAGE DURING CONSTRUCTION.
   B. REMOVE IRRIGATION FENCE SPRINKLERS AND REMOTE CONTROL VALVES FOR IRRIGATION MAINTENANCE PARTS. INSTALL WATER LINES AS SHOWN ON UTILITY PLAN.
   C. SPRINKLERS TO BE REVIEWED, LEVELED AND ADJUSTED FOR EFFECTIVE COVERAGE TO FUNCTION AS DESIGNED
   D. CONTRACTOR TO REPAIR AND REPLACE ANY EXISTING IRRIGATION DAMAGED DURING SITE WORK.

ELECTRICAL AND COMM. WIRING NOTES:

(CONTRACTOR IS MADE AWARE OF THE FOLLOWING INFORMATION THAT MAY NOT BE REPRESENTED ON THESE DRAWINGS)

THE CONTRACTOR SHALL ANTICIPATE ENCOUNTERING UNDERGROUND ELECTRICAL AND COMMUNICATIONS WIRING WITHIN THE LIMITS OF THE FIELD. THE CONTRACTOR SHALL MAINTAIN THE WORKING ORDER OF THE SYSTEM DURING CONSTRUCTION. HOWEVER, SOME SYSTEM COMPONENTS MAY REQUIRE RELOCATION AND/OR MODIFICATION. ANY REQUIRED RELOCATION AND/OR MODIFICATION OF EXISTING ELECTRICAL OR COMMUNICATIONS SYSTEM COMPONENTS SHALL BE PERFORMED AT NO ADDITIONAL COST TO THE OWNER. EXISTING FACILITIES ARE SHOWN IN THEIR APPROXIMATE LOCATIONS FOR THE CONTRACTOR'S CONVENIENCE. HOWEVER, THIS DRAWING MAY NOT REFLECT THE ACTUAL LOCATION OF UNDERGROUND ELECTRICAL ITEMS.

GENERAL SHEET NOTES

1. REFER TO SHEET C-001 & C-002 FOR GENERAL CIVIL NOTES AND LEGEND.
2. THIS SHEET IS PART OF A MULTI-SHEET SET OF CONSTRUCTION PLANS AND SHALL BE READ WITH THE FULL SET TO BEST ENSURE PROPER INTERPRETATION.
3. REFER TO LANDSCAPE PLAN LP101 FOR PROPOSED PLANTINGS.
4. EXISTING WATER VALVES TO REMAIN.CONTRACTOR TO PRESERVE AND PROTECT AT ALL TIMES, AND MAINTAIN FREE ACCESS FOR FIRE DEPARTMENT THROUGHOUT CONSTRUCTION.
5. EXISTING FIRE HYDRANTS TO REMAIN. CONTRACTOR TO PRESERVE AND PROTECT AT ALL TIMES, AND MAINTAIN FREE ACCESS FOR FIRE DEPARTMENT THROUGHOUT CONSTRUCTION.
6. AREAS DESIGNATED AS DEMOLISHED GRAVEL WILL HAVE ALL EXISTING GRAVEL PAVEMENT REMOVED AND REPLACED WITH CLEAN FILL DIRT TO EXISTING GRADE IF NOT SHOWN AS GRADED IN GRADING PLAN.

SHEET LEGEND

- DEMOLISH PAVEMENT AND CURB & GUTTER
- DEMOLISH UTILITY LINE/LINEAR SITE FEATURE
- TPF — TPF — TREE PROTECTION FENCE
- x — x — x — EXISTING FENCE
- REMOVE TREE WITH ROOT SYSTEM

PERMIT SET

SANDY SPRINGS GEORGIA

GEORGIA REGISTERED No. 1239 LANDSCAPE ARCHITECT ROBERT BRADLEY JONES
GSWCC: #31792
10/21/2019 SEAL

MARK	DESCRIPTION	DATE	APPR.
0	BID SET	2019.10.16	

DESIGNED BY: PBT
DWN BY: PBT
CKD BY: RBJ
SUBMITTED BY: PBT
DATE: OCTOBER 16, 2019
SOLICITATION NO.: -
CONTRACT NO.: -
FILE NUMBER: -
FILE NAME: CD101.dwg
SIZE: 22" x 34"
PLOT SCALE: 1:1
PLOT DATE: 10/21/2019

CITY OF SANDY SPRINGS
1 GALAMBOS WAY
SANDY SPRINGS, GA 30328

POND
3500 Parkway Lane
Peachtree Corners, GA
Suite 550, 30092
Phone 678.336.7740
Fax 678.336.7744
POND PROJECT No. 1190708

HERITAGE PARK IMPROVEMENTS

DEMOLITION PLAN

SHEET IDENTIFICATION NUMBER
CD101

FILE PATH: X:\FY19\1190708\04.CAD_BIM\04.02.CAD\CD101.DWG PLOTTED BY: JONES, BRAD

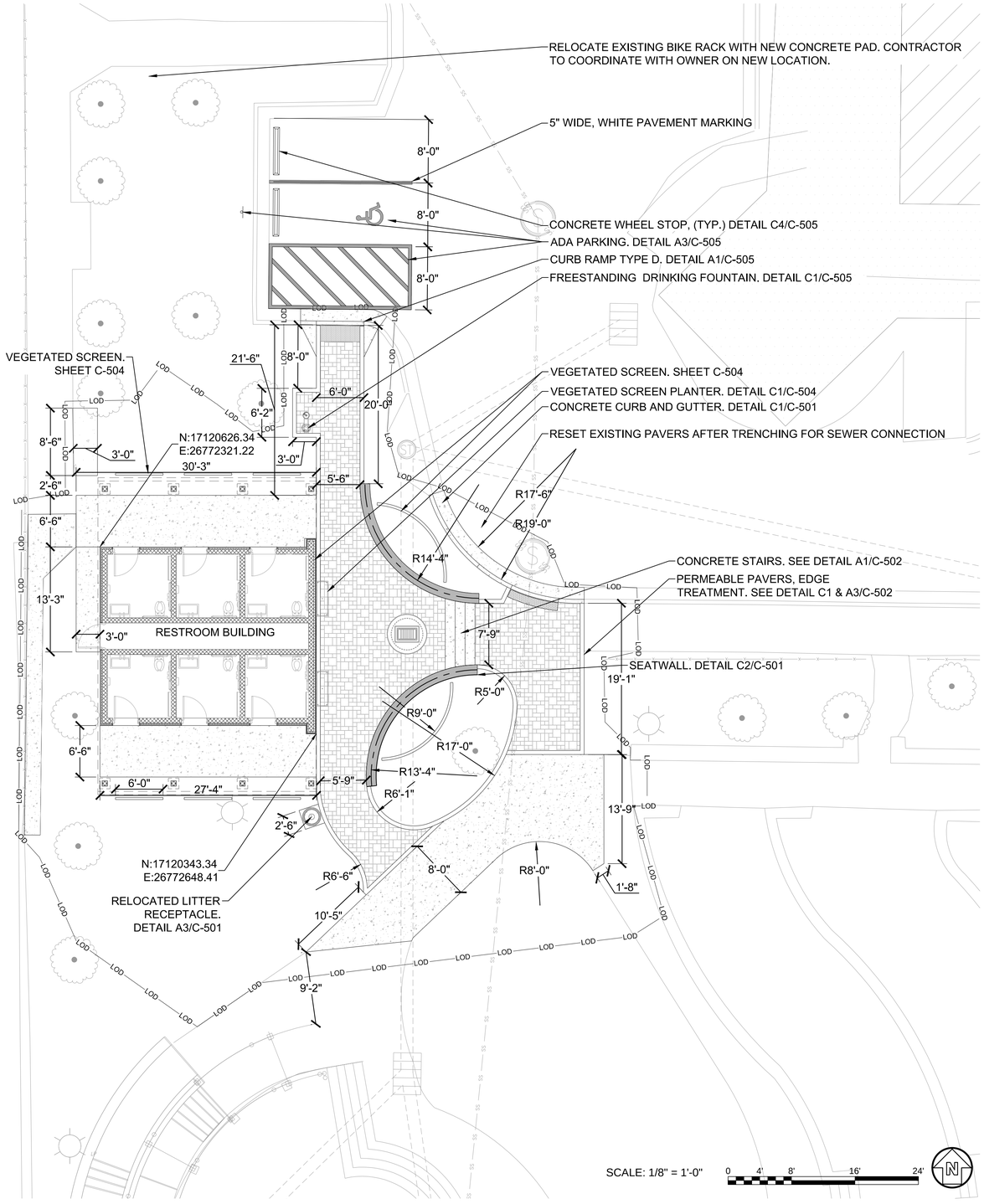

KEY MAP
N.T.S.

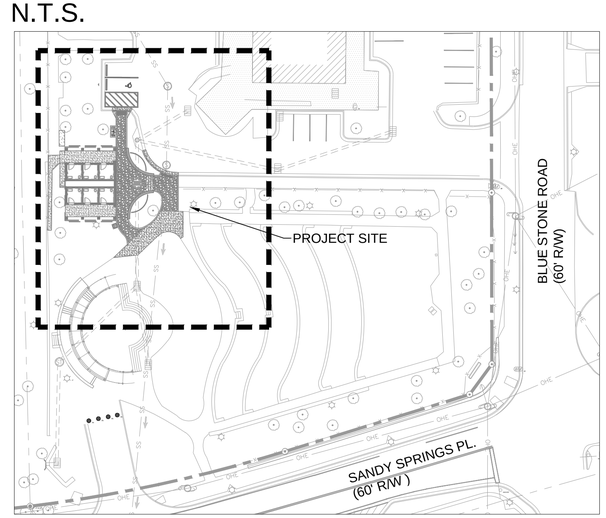

GENERAL SHEET NOTES

1. REFER TO SHEET C-001 AND C-002 FOR GENERAL CIVIL NOTES, LEGEND, AND ABBREVIATIONS.
2. THIS SHEET IS PART OF A MULTI-SHEET SET OF CONSTRUCTION PLANS AND SHALL BE READ WITH THE FULL SET TO BEST ENSURE PROPER INTERPRETATION.
3. PAVER: AQUALINE 3-PIECE ASHLAR STACK BOND BOND PATTERN WITH CONCRETE BORDER, BY BELGARD PR APPROVED EQUIVALENT. COLOR TO BE SLECTED FROM SRI RANGE OF COLORS BY OWNER'S REPRESENTATIVE.

SHEET LEGEND

CONCRETE PAVEMENT. DETAIL A1/C-501

CONCRETE PAVERS. SEE NOTE 3 DETAILS C1 & A3/ C-502

PERMIT SET

SANDY SPRINGS GEORGIA

GEORGIA REGISTERED No. 1239 LANDSCAPE ARCHITECT ROBERT BRADLEY JONES

GSWCC: #31792
10/21/2019 SEAL

MARK	DESCRIPTION	DATE	APPR.
0	BID SET	2019.10.16	

DESIGNED BY: PBT
DWN BY: PBT
CKD BY: RBJ
SUBMITTED BY: PBT
DATE: OCTOBER 16, 2019
SOLICITATION NO.: -
CONTRACT NO.: -
FILE NUMBER: -
FILE NAME: CS101.dwg
SHEET SIZE: 22" x 34"
PLOT SCALE: 1:1
PLOT DATE: 10/21/2019

CITY OF SANDY SPRINGS
1 GALAMBOS WAY
SANDY SPRINGS, GA 30328

POND
3500 Parkway Lane
Peachtree Corners, GA
30092 SUITE 400
Phone 678.336.7740
Fax 678.336.7744
POND PROJECT No.1190708

HERITAGE PARK IMPROVEMENTS

SITE PLAN

SHEET IDENTIFICATION NUMBER
CS101

FILE PATH: \\ACP3SERVER\RESOURCES\PROJECTS\FY19\1190708\04.CAD_BIM\04.02.CAD\CS101.DWG PLOTTED BY: JONES, BRAD

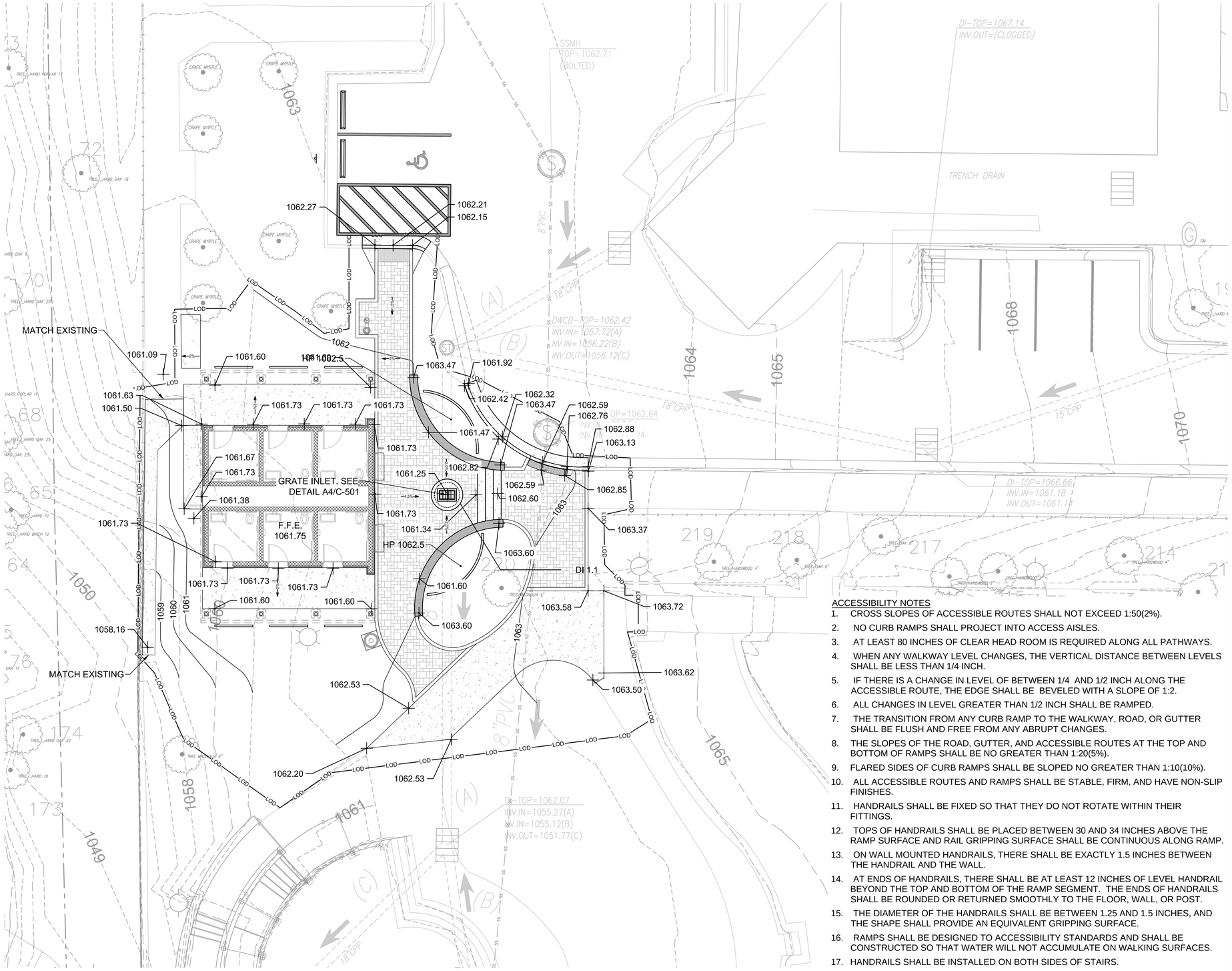

GENERAL SHEET NOTES

1. REFER TO SHEET C-001 & C-002 FOR GENERAL CIVIL NOTES AND LEGEND.
2. THIS SHEET IS PART OF A MULTI-DISCIPLINE, MULTI-SHEET SET OF CONSTRUCTION PLANS AND SHALL BE READ AND COORDINATED WITH THE FULL SET TO BEST ENSURE PROPER INTERPRETATION.
3. CALL BEFORE YOU DIG 811 OR (800) 282-7411
4. NOTE TO ENTER:
   - A. TOP OF FOOTING: 1060.42
   - B. BOTTOM FOOTING OF BUILDING: 1059.42
   - C. BOTTOM FOOTING OF COLUMN: 1059.25

ACCESSIBILITY NOTES

1. CROSS SLOPES OF ACCESSIBLE ROUTES SHALL NOT EXCEED 1:50(2%).
2. NO CURB RAMPS SHALL PROJECT INTO ACCESS AISLES.
3. AT LEAST 80 INCHES OF CLEAR HEAD ROOM IS REQUIRED ALONG ALL PATHWAYS.
4. WHEN ANY WALKWAY LEVEL CHANGES, THE VERTICAL DISTANCE BETWEEN LEVELS SHALL BE LESS THAN 1/4 INCH.
5. IF THERE IS A CHANGE IN LEVEL OF BETWEEN 1/4 AND 1/2 INCH ALONG THE ACCESSIBLE ROUTE, THE EDGE SHALL BE BEVELED WITH A SLOPE OF 1:2.
6. ALL CHANGES IN LEVEL GREATER THAN 1/2 INCH SHALL BE RAMPED.
7. THE TRANSITION FROM ANY CURB RAMP TO THE WALKWAY, ROAD, OR GUTTER SHALL BE FLUSH AND FREE FROM ANY ABRUPT CHANGES.
8. THE SLOPES OF THE ROAD, GUTTER, AND ACCESSIBLE ROUTES AT THE TOP AND BOTTOM OF RAMPS SHALL BE NO GREATER THAN 1:20(5%).
9. FLARED SIDES OF CURB RAMPS SHALL BE SLOPED NO GREATER THAN 1:10(10%).
10. ALL ACCESSIBLE ROUTES AND RAMPS SHALL BE STABLE, FIRM, AND HAVE NON-SLIP FINISHES.
11. HANDRAILS SHALL BE FIXED SO THAT THEY DO NOT ROTATE WITHIN THEIR FITTINGS.
12. TOPS OF HANDRAILS SHALL BE PLACED BETWEEN 30 AND 34 INCHES ABOVE THE RAMP SURFACE AND RAIL GRIPPING SURFACE SHALL BE CONTINUOUS ALONG RAMP.
13. ON WALL MOUNTED HANDRAILS, THERE SHALL BE EXACTLY 1.5 INCHES BETWEEN THE HANDRAIL AND THE WALL.
14. AT ENDS OF HANDRAILS, THERE SHALL BE AT LEAST 12 INCHES OF LEVEL HANDRAIL BEYOND THE TOP AND BOTTOM OF THE RAMP SEGMENT. THE ENDS OF HANDRAILS SHALL BE ROUNDED OR RETURNED SMOOTHLY TO THE FLOOR, WALL, OR POST.
15. THE DIAMETER OF THE HANDRAILS SHALL BE BETWEEN 1.25 AND 1.5 INCHES, AND THE SHAPE SHALL PROVIDE AN EQUIVALENT GRIPPING SURFACE.
16. RAMPS SHALL BE DESIGNED TO ACCESSIBILITY STANDARDS AND SHALL BE CONSTRUCTED SO THAT WATER WILL NOT ACCUMULATE ON WALKING SURFACES.
17. HANDRAILS SHALL BE INSTALLED ON BOTH SIDES OF STAIRS.

SCALE: 1/8" = 1'-0" 0 4' 8' 16' 24'

SHEET LEGEND

LOD	LIMITS OF DISTURBANCE
ELEV	PROPOSED SPOT ELEVATIONS
	EXISTING CONTOUR
	PROPOSED CONTOUR

PERMIT SET

SANDY SPRINGS GEORGIA

GEORGIA REGISTERED No. 1339 LANDSCAPE ARCHITECT ROBERT BRADLEY JONES

GSWCC: #31792
10/21/2019 SEAL

MARK	DESCRIPTION	DATE	APPR.
0	BID SET	2019.10.16	

DATE: OCTOBER 16, 2019
SOLICITATION NO.: -
CONTRACT NO.: -
FILE NUMBER: -
PLOT DATE: 10/21/2019

DESIGNED BY: PBT
DWN BY: PBT
CKD BY: RBJ
SUBMITTED BY: PBT
FILE NAME: CG101.dwg
PLOT SCALE: 1:1
PLOT SIZE: 22" x 34"

CITY OF SANDY SPRINGS
1 GALAMBOS WAY
SANDY SPRINGS, GA 30328

POND
3500 Parkway Lane
Peachtree Corners, GA
30092 Suite 100
Phone 678.336.7740
Fax 678.336.7744
POND PROJECT No.1190708

HERITAGE PARK IMPROVEMENTS

GRADING PLAN

SHEET IDENTIFICATION NUMBER
CG101

FILE PATH: X:\FY19\1190708\04.CAD_BIM\04.02.CAD\CG101.DWG PLOTTED BY: JONES, BRAD

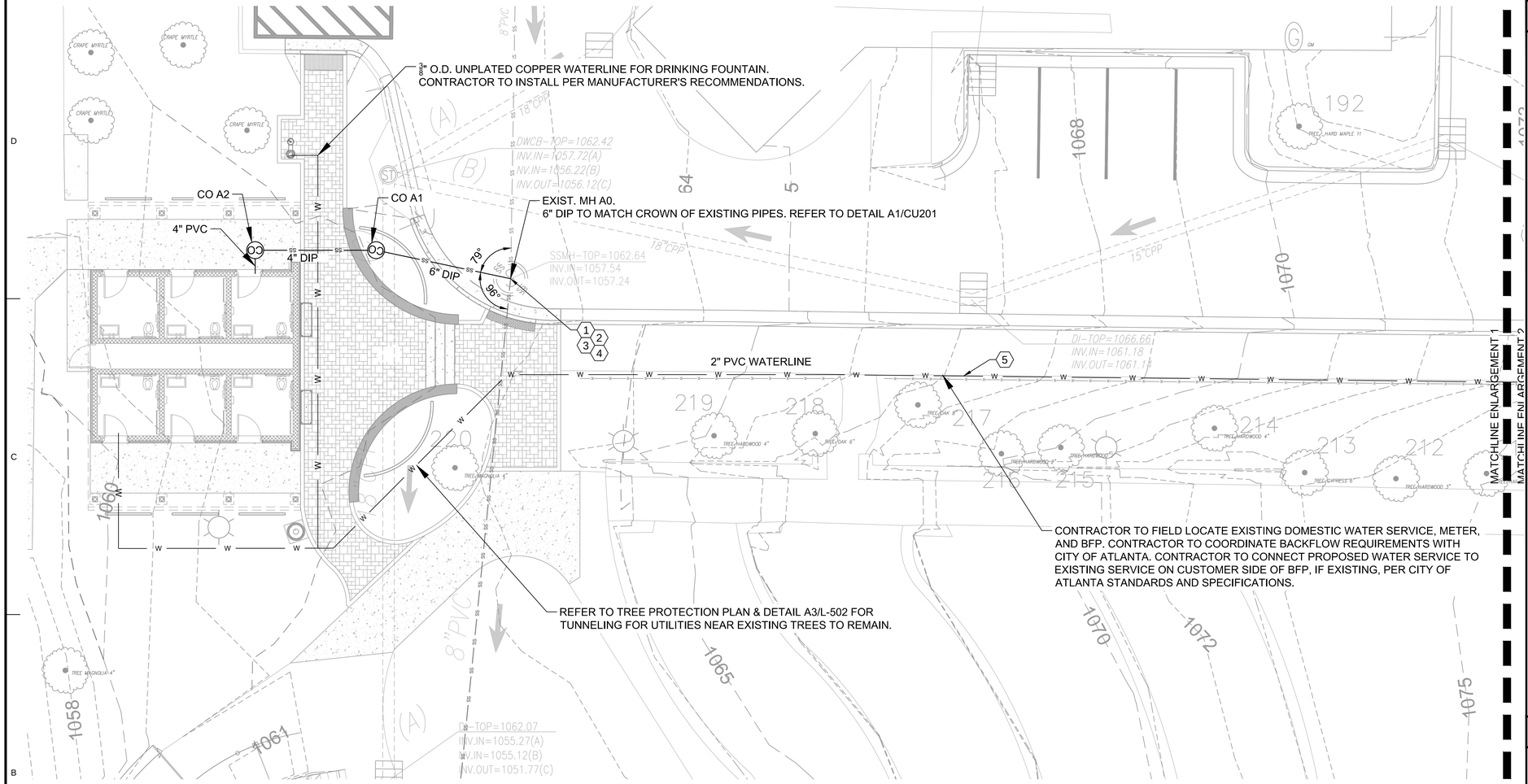

B1 ENLARGEMENT 1
SCALE: 1/8" = 1'-0"

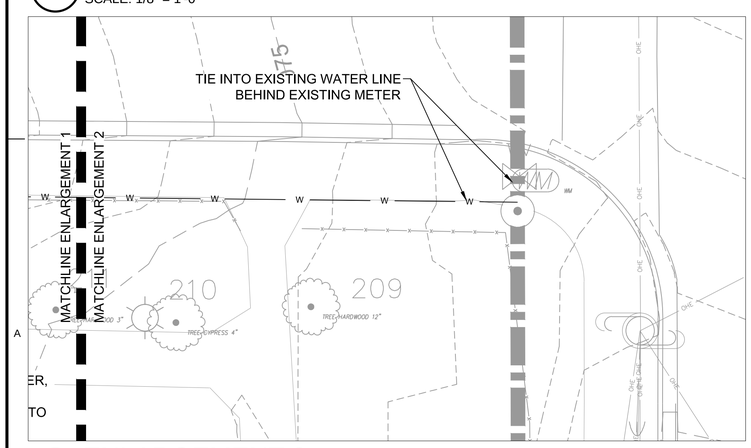

A1 ENLARGEMENT 2
SCALE: 1/8" = 1'-0"

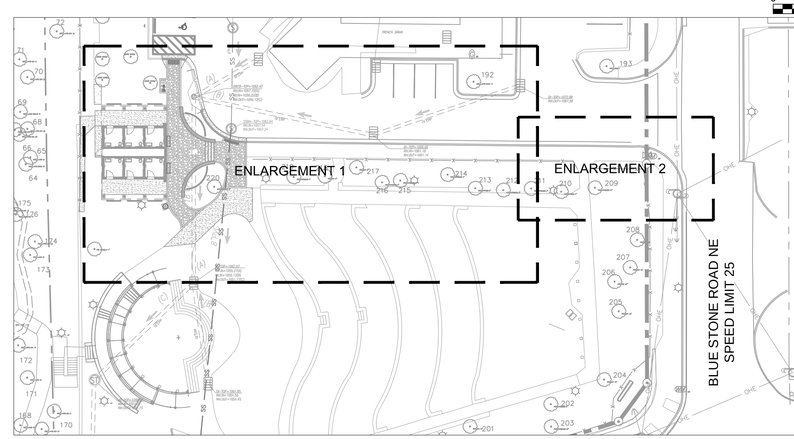

KEY MAP
SCALE: NOT TO SCALE

GENERAL SHEET NOTES

1. REFER TO SHEET C-001 AND C-002 FOR GENERAL CIVIL NOTES, LEGENDS, AND ABBREVIATIONS.
2. THIS SHEET IS PART OF A MULTI-SHEET SET OF CONSTRUCTION PLANS AND SHALL BE READ WITH THE FULL SET TO BEST ENSURE PROPER INTERPRETATION.
3. NO TREES SHALL BE PLANTED IN UTILITY EASEMENTS OR WITHIN 5-FEET OF ANY UTILITY LINES.
4. ALL WASTEWATER LINES AND LATERALS WITH LESS THAN ONE-FOOT OF CLEARANCE TO ANOTHER UTILITY LINE SHALL BE CONSTRUCTED WITH A CONCRETE SADDLE TO MAINTAIN SEPARATION.
5. EXISTING WASTEWATER LINES WILL BE CCTV INSPECTED OVER WHICH CONSTRUCTION OCCURS FOR AS-BUILT APPROVAL.
6. CONTRACTOR IS RESPONSIBLE TO VERIFY THE LOCATION AND DEPTH OF THE EXISTING WATER LINES PRIOR TO CONSTRUCTION.
7. IF EXISTING WATER SERVICE LINE IS TO BE REMOVED AND ABANDONED, THE SERVICE SHALL BE REMOVED BACK TO THE CORPORATION STOP AND CAPPED AT THE WATER MAIN LINE IN THE PRESENCE OF THE INSPECTOR. OTHER EXISTING AND ABANDONED WATER SERVICE STRUCTURES WILL BE REMOVED IN THE PRESENCE OF THE INSPECTOR.
8. ACCEPTABLE MATERIALS FOR WATER LINES WITHIN FULTON COUNTY ARE EITHER TYPE "K" COPPER FOR LINES UP TO 4" OR CLASS 50 DIP AWWA C151 FOR LINES 4" AND LARGER.
9. WATER METER BOXES ARE TO HAVE 1-INCH TYPE "K" COPPER SERVICE LINE. THE SERVICE LINE MUST BE CONTINUOUS FROM THE MAIN TO THE WATER METER AND SHALL HAVE A MINIMUM COVER OF 48". ALL JOINTS SHALL BE FLARED. THE SERVICE LINE SHALL CONNECT TO THE MAIN LINE WITH A DIRECT TAP WITH A CORPORATION COCK WITH A MINIMUM OF 18" BETWEEN TAPS.
10. CURB STOPS ARE TO BE FORD ANGLE BALL SERVICE VALVE BA21-444W-NL. THE CENTER OF THE CURB STOPS ARE TO BE SET 10" BELOW GRADE. THE SHOULDERS ARE TO BE GRADED TO FINISHED GRADE PRIOR TO SETTING THE WATER METER BOXES.
11. SEE DETAIL D2/S-501 FOR PIPES ENTERING BUILDING BELOW FOOTING.

SHEET KEYNOTES

1. CONTRACTOR TO FIELD VERIFY THE LOCATION AND INVERT OF THE EXISTING WASTEWATER LINE PRIOR TO CONSTRUCTION.
2. CORE AND BOOT NEW CONNECTION INTO EXISTING MANHOLE
3. THE NEW INFLUENT LINE IS TO ENTER THE STRUCTURE A MINIMUM OF 0.53-FEET ABOVE THE EFFLUENT ELEVATION TO ALLOW NEW WATER TABLE TO BE BUILT.
4. BUILD THE WATER TABLE AND INVERT WITH ROWLOCK BRICKS TO DIRECT THE RUNOFF FROM THE NEW LINES TO EXISTING EFFLUENT INVERT.
5. TAP TO EXISTING WATER LINE TO BE PERFORMED IN ACCORDANCE WITH FULTON COUNTY STANDARD DETAILS. SEE SHEET C-503.

Office_SF(.1)_____ Church_____ Seats(5)_____
Retail Sales_____SF(.1)_____Hospital_____
_Beds(200)_____ Apts.(1 or 2 Bdrms)_____ Units(300)_____
_ Nursing Homes_____ Beds(100)_____ Singlefamily_____
Lots(400)_____ Elderly Housing_____Res. Units_____
Industrial _____ Employees(2)_____ Laundry _____Machines(250)_
_ Restaurant _____Seats(5) _____ Schools ____Persons(20)_____
Fast Foods_____ Seats (30)_____Hotel/Motel_____
Rooms(100)_____ Warehouse_____ SF(.05) _____ Other__X____
Amphitheater
TOTAL PROPERTY REQUIREMENT 1,975 (GPD)
For carwashes, the Developer shall provide manufacturer specifications to verify flow calculations.

SANDY SPRINGS GEORGIA

GEORGIA REGISTERED PROFESSIONAL ENGINEER No. PE038868 KEVIN D. HENDRIX
SEAL

MARK	DESCRIPTION	DATE	APPR.
0	BID SET	2019.10.16	

DESIGNED BY: PBT
DWN BY: PBT
CKD BY: RBJ
SUBMITTED BY: PBT
DATE: OCTOBER 16, 2019
SOLICITATION NO.: -
CONTRACT NO.: -
FILE NUMBER: -
FILE NAME: CU201.dwg
SIZE: 22" x 34"
PLOT SCALE: 1:1
PLOT DATE: 10/21/2019

CITY OF SANDY SPRINGS
1 GALAMBOS WAY
SANDY SPRINGS, GA 30328

POND
3500 Parkway Lane
Peachtree Corners, GA 30092-2688
Phone 678.336.7740
Fax 678.336.7744
POND PROJECT No. 1190708

HERITAGE PARK IMPROVEMENTS

UTILITY PLAN

SHEET IDENTIFICATION NUMBER
CU101

PERMIT SET

FILE PATH: X:\FY19\1190708\04.CAD_BIM\04.02.CAD\CU101.DWG PLOTTED BY: JONES, BRAD

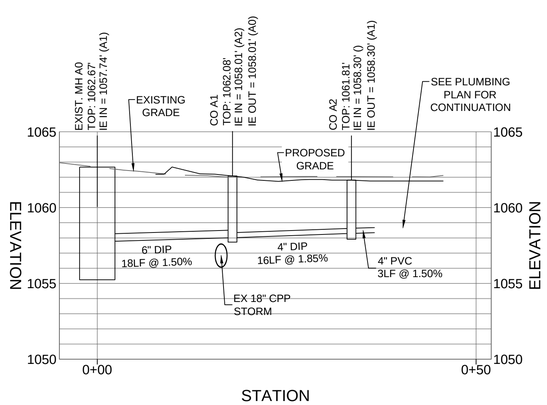

SANITARY SEWER PROFILE

A1 SANITARY SEWER PROFILE

SCALE: 1" = 10' HORIZONTAL 0 5' 10' 20' 30'

SCALE: 1" = 5' VERTICAL 0 2.5' 5' 10' 15'

GENERAL SHEET NOTES

1. REFER TO SHEET C-001 AND C-002 FOR GENERAL CIVIL NOTES, LEGENDS, AND ABBREVIATIONS.
2. THIS SHEET IS PART OF A MULTI-SHEET SET OF CONSTRUCTION PLANS AND SHALL BE READ WITH THE FULL SET TO BEST ENSURE PROPER INTERPRETATION.

PERMIT SET

SANDY SPRINGS GEORGIA

GEORGIA REGISTERED PROFESSIONAL ENGINEER No. PE038968 KEVIN D. HENDRIX

SEAL

MARK	DESCRIPTION	DATE	APPR.
0	BID SET	2019.10.16	

DESIGNED BY: PBT
DWN BY: PBT
CKD BY: RBJ
SUBMITTED BY: PBT
DATE: OCTOBER 16, 2019
SOLICITATION NO.: -
CONTRACT NO.: -
FILE NUMBER: -
FILE NAME: CU201.dwg
SIZE: 22" x 34"
PLOT SCALE: 1:1
PLOT DATE: 10/21/2019

CITY OF SANDY SPRINGS
1 GALAMBOS WAY
SANDY SPRINGS, GA 30328

POND
3500 Parkway Lane
Peachtree Corners, GA 30092, SUITE 550
Phone 678.336.7740 Fax 678.336.7744
POND PROJECT No.1190708

HERITAGE PARK IMPROVEMENTS

SANITARY SEWER PROFILE

SHEET IDENTIFICATION NUMBER

CU201

FILE PATH: X:\FY19\1190708\04.CAD_BIM\04.02.CAD\CU201.DWG PLOTTED BY: JONES, BRAD

DETAILS OF RECESSED CURB
TYPICAL USE: AT DRIVEWAYS OR CURB CUT RAMPS
N.T.S.

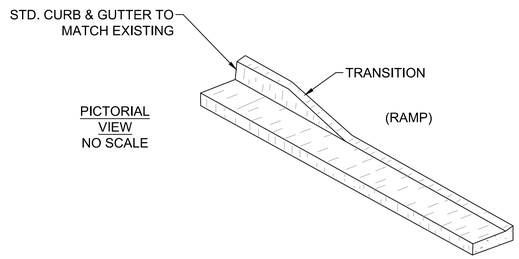

PICTORIAL VIEW
NO SCALE

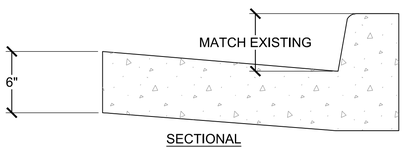

SECTIONAL VIEW

NOTE: DETAIL REVISED FROM FULTON COUNTY STANDARD DETAIL 307. MATCH TOP OF CURB AND WIDTH OF GUTTER TO EXISTING.

C1 CURB & GUTTER
SCALE: N.T.S.

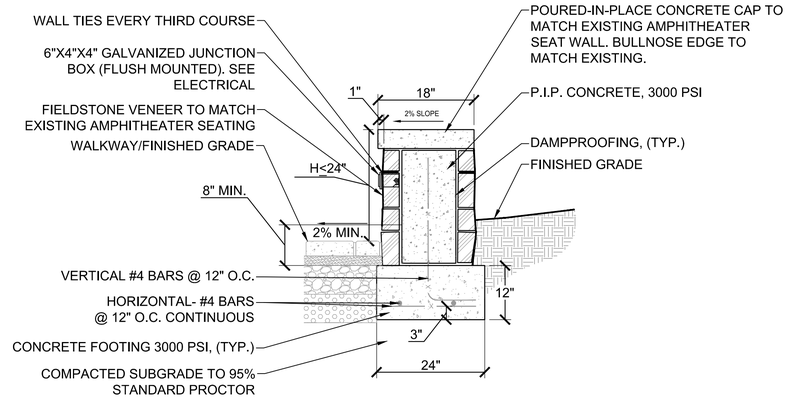

SECTION

P.I.P. W/ GRANITE VENEER RETAINING WALL
N.T.S.

GENERAL NOTES FOR RETAINING WALLS:
1. SUBMIT SAMPLE OF TENNESSEE FIELDSTONE VENEER FOR APPROVAL BY OWNER'S REPRESENTATIVE.
2. WEEPHOLES TO BE PROVIDED ONLY IF A FOUNDATION DRAIN IS NOT PROVIDED.
3. MINIMUM BEARING CAPACITY SHALL BE 3000 PSF.
4. MORTAR JOINTS TO BE 3/4" MINIMUM ON AVERAGE.
5. COMPACTION AND SUBBASE DEPTH TO BE VERIFIED AND APPROVED BY GEOTECHNICAL CONSULTANT. FOR BID PURPOSES ASSUME INSTALLATION OF SUBBASE INDICATED ON DRAWINGS. ANY ADDITIONAL WORK AS A RESULT OF RECOMMENDATIONS MADE BY GEOTECHNICAL CONSULTANT SHALL BE PAID/DELETED BY UNIT PRICE.

C2 SEAT WALL
SCALE: N.T.S.

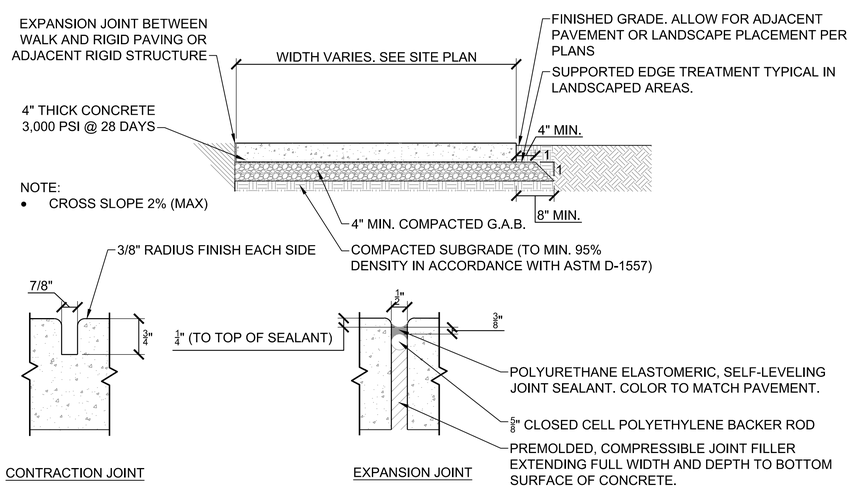

NOTE:
- CROSS SLOPE 2% (MAX)

CONTRACTION JOINT

EXPANSION JOINT

NOTE:
1. CONTRACTION JOINTS SHALL BE TROWELED AND DIVIDE SIDEWALK INTO EQUAL SQUARE PANELS WHEREVER POSSIBLE.
2. 1/2" EXPANSION JOINTS @ 25' MAX. SPACING AND AT JUNCTIONS WITH OTHER STRUCTURES, RIGID PAVING, CURBS, OR AT CHANGE OF DIRECTION. .
3. TOOL ALL EXPOSED EDGES AND JOINTS TO 1/4" RADIUS.
4. LIGHT BROOM FINISH PERPENDICULAR TO TRAVEL.
5. REPEAT TOOLING OF EDGES AFTER APPLYING SURFACE FINISHES. ELIMINATE EDGING-TOOL MARKS ON CONCRETE SURFACES.

A1 CONCRETE WALKWAY AND JOINTS
SCALE: N.T.S.

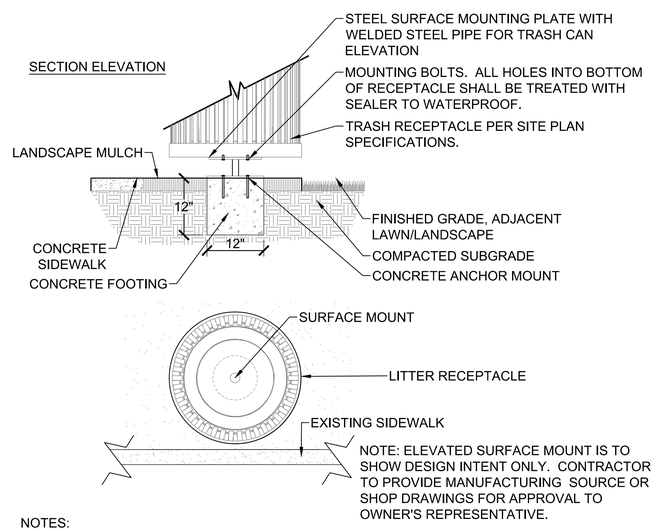

NOTES:
1. ELEVATED SURFACE MOUNT IS TO SHOW DESIGN INTENT ONLY. CONTRACTOR TO PROVIDE MANUFACTURING SOURCE OR SHOP DRAWINGS FOR APPROVAL TO OWNER'S REPRESENTATIVE.
2. SUBGRADE TO BE COMPACTED ONLY UNDER FOOTING.
3. CONTRACTOR TO RESET EXISTING LITTER RECEPTACLE TO PROPOSED LOCATION.

A3 LITTER RECEPTACLE MOUNTING
SCALE: N.T.S.

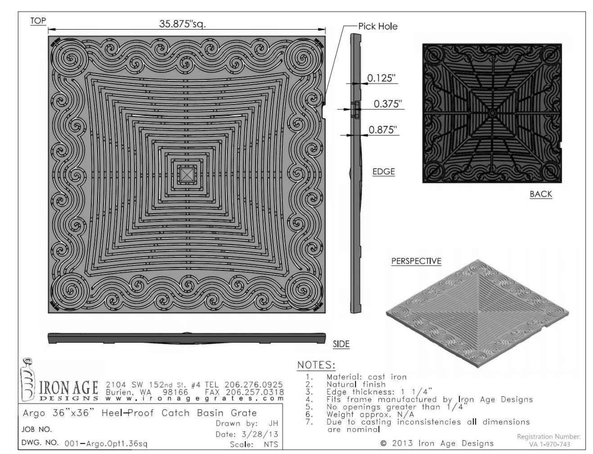

A4 GRATE INLET
SCALE: N.T.S.

PERMIT SET

SANDY SPRINGS GEORGIA

GEORGIA REGISTERED No. 1339 LANDSCAPE ARCHITECT ROBERT BRADLEY JONES
GSWCC: #31792
10/21/2019 SEAL

MARK	DESCRIPTION	DATE	APPR.
0	BID SET	2019.10.16	

DESIGNED BY: PBT
DWN BY: PBT
CKD BY: RBJ
SUBMITTED BY: PBT
DATE: OCTOBER 16, 2019
SOLICITATION NO.: -
CONTRACT NO.: -
FILE NUMBER: -
FILE NAME: C-501.dwg
PLOT SCALE: 1:1
PLOT DATE: 10/21/2019
SIZE: 22" x 34"

CITY OF SANDY SPRINGS
1 GALAMBOS WAY
SANDY SPRINGS, GA 30328

POND
3500 Parkway Lane
Peachtree Corners, GA
30092, SUITE 400
Phone 678.336.7740
Fax 678.336.7744
POND PROJECT No.1190708

HERITAGE PARK IMPROVEMENTS

SITE DETAILS

SHEET IDENTIFICATION NUMBER
C-501

FILE PATH: \\ACP3SERVER\RESOURCES\PROJECTS\FY19\1190708\04.CAD_BIM\04.02.CAD\C-501.DWG PLOTTED BY: JONES, BRAD

NOTE: NO RUNOFF MAY BE DIRECTED TOWARDS PAVERS FROM OUTSIDE ITS SURFACE AREA.

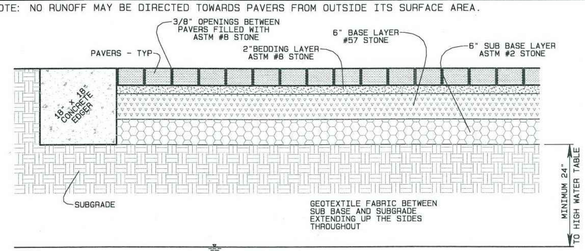

PLAN
SCALE: NTS

PERMEABLE PAVER SYSTEMS

Design Criteria
- Intended for low traffic areas, or for residential or overflow parking applications, not ideal for areas with a tree canopy
- Aesthetically pleasing
- Americans with Disabilities Act (ADA) compliant
- Should be a minimum of two feet above the natural water table
- Should be a minimum of 15 feet away from buildings

Limitations
- Potential for high failure rate if not adequately maintained or used in unstabilized areas
- Geotechnical analysis of soils required; Minimum Infiltration 0.5 In/Hr
- Ineffective under tree canopy, due to clogging

Maintenance Requirements
- High maintenance requirements
- Weed and remove grass out of bricks / blocks as necessary (unless concrete grid pavers are used)
- Sweep or vacuum the pavers as necessary

Pollutant Removal
- 80% TSS Removal

Suitability
- Runoff Reduction
  - 100% of the runoff reduction credit if an underdrain is not used
  - 75% of the runoff reduction credit if an upturned underdrain is used
  - 50% of the runoff reduction credit if an underdrain is used
- Water Quality
- Channel Protection ? May provide partial benefits
- Overbank Flood Protection ? May provide partial benefits
- Extreme Flood Protection ? May provide partial benefits

PERMEABLE PAVERS MAINTENANCE

Common Problems
- Sediment Build-Up and clogging between Pavers
- Settling
- Pavers cracking or splitting

Monthly during dry weather
- Keep the pavers free of trash, debris, and sediment.
- Make sure that there is no standing water in the pavers between storms.
- Remove weeds and grass growing between pavers (unless concrete grid pavers are being used).
- Mow grass within the pavers (only for concrete grid with grass).
- Mow / trim grass or vegetation near the pavers and remove clippings from area.
- Visually inspect the pavers after large storms to ensure the overflow drainage system is working.
- Inspect the pavers for damage and repair.
- Vacuum sweep the paver surface to keep free of sediment.
- After cleaning, additional aggregate may need to be added between the pavers. Replace aggregate between the pavers as necessary.

As Needed Typical Routine Maintenance Activities
- Keep the contributing drainage area and surface of the pavers clear of debris, trash, and sediment.
- Ensure that areas surrounding the practice are stabilized and mowed, remove grass clippings.

Semi-annually in Spring and Fall
- Remove sediment, dirt, leaves, and any debris.
- Replace any joint material that has eroded or washed away.
- Observe the system during a rain event.
- Areas should be routinely inspected for settling and loss of water flow through the system. Repair settled areas.

As Needed in Winter
- Organic deicers may be used to melt ice and snow.
- Snow plows may be used when necessary under the following conditions:
  1. The edges of the plow are beveled.
  2. The blade of the snow plow is raised 1-2 inches.
  3. The snow plow is equipped with snow shoes which allow the blade to glide across uneven surfaces.

Annual Routine Maintenance Activities
- Inspect the surface for deterioration or breaking into fragments.
- Flush the underdrain system to check for clogging (if applicable).

Upon Failure Routine Maintenance Activities
- Remove the Permeable Pavers; include the top and base layers of the practice. Clean pavers and base aggregate, and replace as needed.

Record Keeping
- Records of maintenance activities are required for Non-Residential Properties.
- Records of maintenance activities are recommended and should be maintained by Homeowners or residential properties.

NOTE: REPLACEMENT WITH NON-PERMEABLE SURFACE REQUIRES APPROVAL FROM THE CITY OF SANDY SPRINGS AND INSTALLATION OF ADDITIONAL BMPs.

SHEET	OF	DATE: 4-24-2018	REVISIONS		
1	1	SCALE: AS NOTED	NO.	DESCRIPTION	DATE
		DRAWN: G.E.Q.			
		DESIGN: G.E.Q.			
DRAWING NO.		APPROVED: G.E.Q.			
		CITY: SANDY SPRINGS			
SS DETAILS - BMP-01		COUNTY: FULTON			
		STATE: GEORGIA			

STANDARD DETAILS
PERMEABLE PAVERS

CITY OF SANDY SPRINGS
1 GALAMBOS WAY
SANDY SPRINGS, GA 30350
(770) 730-5600
www.sandyspringsga.gov

SANDY SPRINGS GEORGIA

Printed: 4/24/2018

C1 PERMEABLE PAVERS- SANDY SPRINGS STANDARD DETAIL
SCALE: N.T.S.

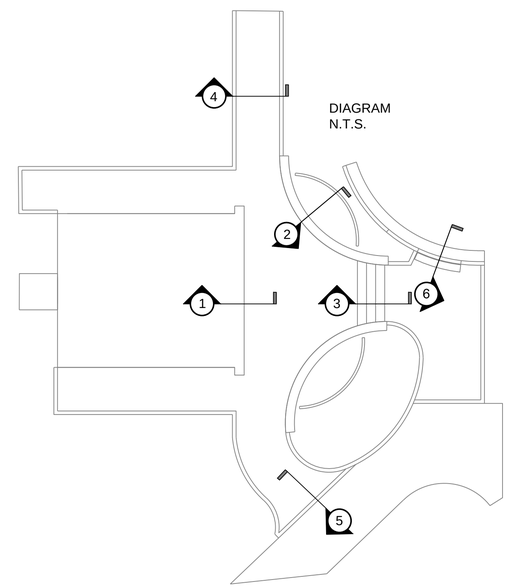

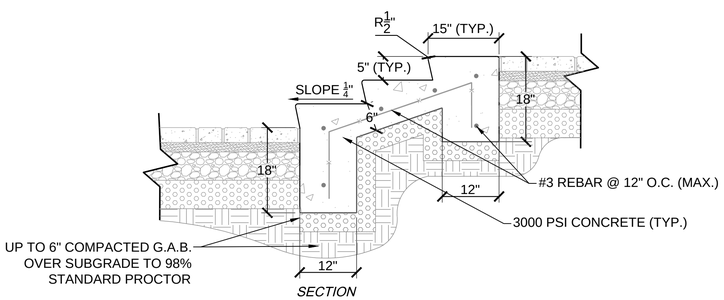

NOTES:
1. REFER TO SITE PLAN FOR NUMBER OF STAIR RISERS/TREADS.
2. COMPACTION AND SUBBASE DEPTH TO BE VERIFIED AND APPROVED BY GEOTECHNICAL CONSULTANT, OWNER'S REPRESENTATIVE, AND DESIGN PROFESSIONAL PRIOR TO G.A.B. PLACEMENT.
3. USE OF COMPACTED G.A.B., THICKNESS AND COMPACTION TO BE DETERMINED, VERIFIED AND APPROVED BY GEOTECHNICAL CONSULTANT BASED ON FIELD CONDITIONS.
4. FOR BID PURPOSES ASSUME INSTALLATION OF SUBBASE INDICATED ON DRAWINGS. ANY ADDITIONAL WORK AS A RESULT OF RECOMMENDATIONS MADE BY GEOTECHNICAL CONSULTANT SHALL BE PAID/DELETED BY UNIT PRICE.

A1 CONCRETE STAIRS
SCALE: 3/4" = 1'-0"

0 6" 1' 2' 3' 4'

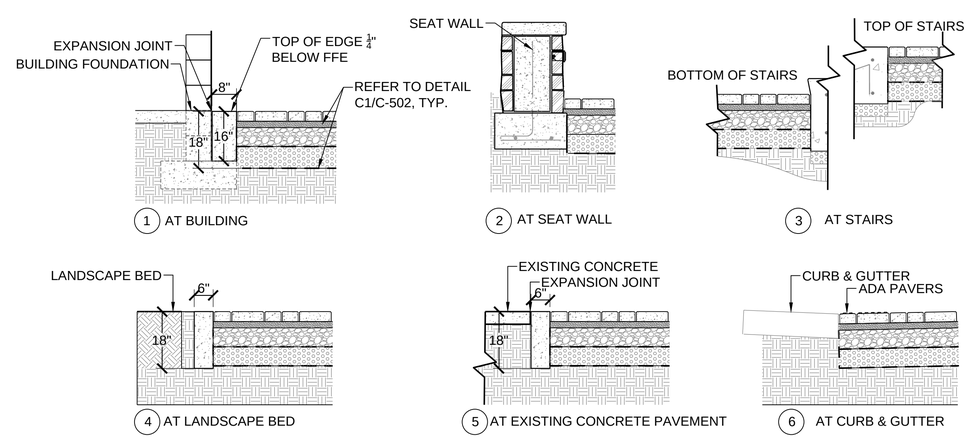

A3 PERMEABLE PAVERS- EDGE TREATMENT
SCALE: 3/4" = 1'-0"

0 6" 1' 2' 3' 4'

PERMIT SET

SANDY SPRINGS GEORGIA

GEORGIA REGISTERED No. 3339 LANDSCAPE ARCHITECT ROBERT BRADLEY JONES
GSWCC: #31792
10/21/2019 SEAL

MARK	DESCRIPTION	DATE	APPR.
0	BID SET	2019.10.16	

DATE: OCTOBER 16, 2019
SOLICITATION NO.: -
CONTRACT NO.: -
FILE NUMBER: -
PLOT DATE: 10/21/2019

DESIGNED BY: PBT
DWN BY: PBT
CKD BY: RBJ
SUBMITTED BY: PBT
FILE NAME: C-501.dwg
PLOT SCALE: 1:1
SIZE: 22" x 34"

CITY OF SANDY SPRINGS
1 GALAMBOS WAY
SANDY SPRINGS, GA 30328

POND
3500 Parkway Lane
Peachtree Corners, GA
30092, Suite 300
Phone 678.336.7740
Fax 678.336.7744
POND PROJECT No.1190708

HERITAGE PARK IMPROVEMENTS

SITE DETAILS

SHEET IDENTIFICATION NUMBER
C-502

FILE PATH: \\ACP3SERVER\RESOURCES\PROJECTS\FY19\1190708\04.CAD_BIM\04.02.CAD\C-501.DWG PLOTTED BY: JONES, BRAD

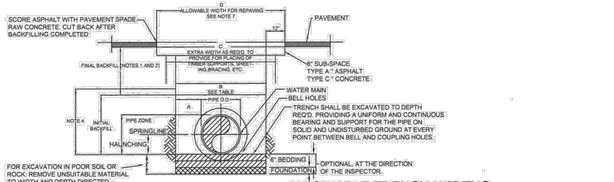

NOTES:

1. COMPACTION: BACKFILLS SHALL BE BUILT-UP IN LAYERS AND EACH LAYER SHALL BE THOROUGHLY COMPACTED BEFORE BEGINNING ANOTHER LAYER. LAYERS SHALL BE NO MORE THAN 6" IN DEPTH. PUDDLING WILL NOT BE PERMITTED, NOR WILL FROZEN OR WET MATERIAL BE PLACED IN TRENCHES.
2. COMPACTION STANDARDS: ALL BACKFILL MATERIALS USED SHALL CONTAIN A SUFFICIENT AMOUNT OF MOISTURE FOR PROPER COMPACTION AND THESE MATERIALS SHALL BE COMPACTED AT NOT LESS THAN 95% OF THEIR OPTIMUM COMPACTION FOR ANY SPECIFIC SOIL CLASSIFICATION AS DETERMINED BY THE MODIFIED PROCTOR TEST A STM. D698.
3. COMPACTION TESTS: COMPACTION TESTS MAY BE REQUIRED IN EXISTING OR PROPOSED STREETS, SIDEWALKS, DRIVES AND OTHER EXISTING OR PROPOSED PAVED AREAS AT VARYING DEPTHS AND AT INTERVALS AS DETERMINED BY THE ENGINEER WITH A MINIMUM OF ONE TEST PER JOB, AND A MAXIMUM OF ONE REQUIRED TEST FOR EACH 400' OR LESS OF WATER MAIN CONSTRUCTION, UNLESS SOIL CONDITIONS OR CONSTRUCTION PRACTICES, IN THE OPINION OF THE ENGINEER, WARRANT THE NEED FOR ADDITIONAL TESTS.
4. NO BOULDERS OR LOOSE ROCKS PERMITTED IN THE BACKFILL AT THE BOTTOM OF PIPE TRENCH TO 2'-0" ABOVE PIPE.
5. ALL DESIGNS BASED ON FULLY COMPACTED BACKFILL AND UNIFORMLY SUPPORTED PIPE.
7. FOR PAVEMENT CUT REPAIRS SEE DRAWING 109.

ALLOWABLE TRENCH WIDTHS

PIPE SIZE (NOM)	A SIDE CLEARANCE INCH		B DITCH WIDTH INCH				C SHORING WIDTH (ADDITIONAL-INCH)	D CUT REPAIR WIDTH FEET			
	SOIL	ROCK	SOIL		ROCK			SOIL		ROCK	
			MJ	SJ	MJ	SJ		MJ	SJ	MJ	SJ
3/4"-2"	2	6	NA	12	NA	14	AS APPROVED	NA	3.00	NA	3.17
4"	9	12	28	22	28	28	AS APPROVED	4.33	3.67	4.33	4.33
6"	9	12	30	24	30	30	AS APPROVED	4.50	4.00	4.50	4.50
8"	9	12	32	26	32	32	AS APPROVED	4.67	4.17	4.67	4.67
10"	9	12	34	28	34	34	AS APPROVED	4.83	4.33	4.83	4.83
12"	9	12	36	30	36	36	AS APPROVED	5.00	4.50	5.00	5.00
14"	9	12	38	32	38	38	AS APPROVED	5.17	4.67	5.17	5.17
16"	9	12	40	34	40	40	AS APPROVED	5.33	4.83	5.33	5.33
20"	9	12	44	38	44	44	AS APPROVED	5.67	5.17	5.67	5.67
24"	9	12	48	42	48	48	AS APPROVED	6.00	5.50	6.00	6.00
30"	9	12	54	48	54	54	AS APPROVED	6.50	6.00	6.50	6.50
36"	9	12	60	54	60	60	AS APPROVED	7.00	6.50	7.00	7.00
42"	9	12	66	60	66	66	AS APPROVED	7.50	7.00	7.50	7.50
48"	9	12	72	66	72	72	AS APPROVED	8.00	7.50	8.00	8.00

FULTON COUNTY STANDARD DETAIL 103
ALLOWABLE TRENCH WIDTHS

DATE	REVISIONS	DATE	REVISIONS
8/08	NRR		
1/17	TPM		

DGS/DRN/CHKD: CMS
APPROVED: REW
DATE: 12-2-05

FULTON COUNTY

FULTON COUNTY PUBLIC WORKS
141 PRYOR ST. ATLANTA, GA. 30303
404-612-7400 FAX: 404-224-0498

DRAWING NO. 103

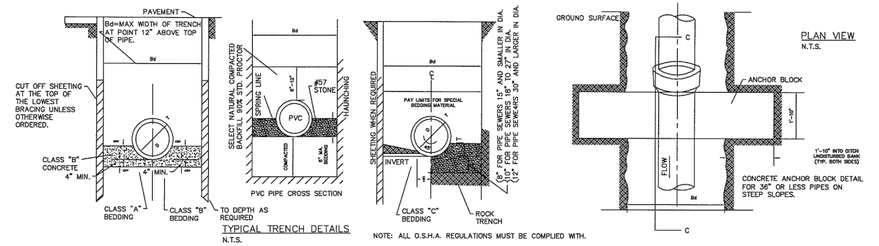

TYPICAL TRENCH DETAILS
N.T.S.

NOTE: ALL O.S.H.A. REGULATIONS MUST BE COMPLIED WITH.

A.S.T.M. A746 DUCTILE IRON PIPE						A.S.T.M. C78– REINF. CONC. PIPE						A.S.T.M. C14– EX. STR. CONC. SEWER PIPE						A.S.T.M.–3034 SDR 35 P.V.C. PIPE					
D. IN	T. IN	Bd FT		C FT	*CRADLE	T. IN	Bd FT		C FT	*CRADLE		T. IN	Bd FT		C FT	*CRADLE	T. IN	Bd FT					
6	0.38	2		0.41	0.034													0.18	2.52				
8	0.42	2.09		0.53	0.036							7 7/8	2.15	0.6	0.041	0.24	3.7						
10	0.48	2.26		0.65	0.043							1	2.33	0.7	0.047	0.3	2.88						
12	0.52	2.43		0.78	0.049							1–3/8	2.56	0.87	0.055	0.36	3.04						
15						2	2.87		0.95	0.08		1–5/8	2.85	1.08	0.066	0.437	3.28						
18	0.73	2.96		1.15	0.072	2–1/4	3		1.15	0.073		2	3.17	1.3	0.086								
21						2–1/2	3.25		1.35	0.088		2–1/4	3.46	1.5	0.105								
24	0.85	3.48		1.52	0.18	1–3/4	3.54		1.55	0.109		2–5/8	3.77	1.72	0.128								
27						3	3.83		1.75	0.131													
30	0.99	4		1.88	0.149	3	4.08		1.95	0.153													
33						3–1/2	4.43		2.2	0.184													
36	1.19	4.5		2.27	0.198	3–3/4	4.75		2.4	0.215													
42	1.32	5		2.63	0.253	4	5.67		2.8	0.288													
48	1.44	5.5		3	0.314	4–1/2	6.25		3	0.36													
54						5	6.83		3.5	0.44													
60						5–1/2	7.42		3.75	0.54													
66						5	8		4.25	0.63													
72						6–1/2	8.58		4.65	0.74													
						7	9.17		5.07	0.86													

NOTE: PAYMENT QUANITY IN CU. YDS./LIN/FT. OF TRENCH FOR CLASS "B" CONC. IN CASE OF CLASS "A" BEDDING & FOR CRUSHED STONE BEDDING MATERIAL IN CASE OF CLASS "B" BEDDING. ADJUST QUANTITY OF CRADLE MATERIAL BASED ON Bd WIDTH & DEPTH OF CRADLE EXCEEDS D/4.

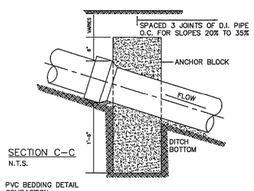

PVC BEDDING DETAIL
COMPACTION–
THE BACKFILL OF ALL TRENCHES TO BE COMPACTED TO A DENSITY OF 90% STANDARD PROCTOR. BACKFILL MATERIAL SHALL BE FREE FROM ROOTS, STUMPS, OR OTHER FOREIGN DEBRIS AND SHALL BE PLACED AT OR NEAR OPTIMUM MOISTURE.

FULTON COUNTY STANDARD DETAIL 117
PIPE SEWER DATA
PVC PIPE INSTALLATION

DATE	REVISIONS	DATE	REVISIONS

DGS/DRN/CHKD: REB
APPROVED: REW
DATE: 12-2-05

FULTON COUNTY

FULTON COUNTY PUBLIC WORKS
141 PRYOR ST. ATLANTA, GA. 30303
404-730-7400 FAX: 404-224-0498

DRAWING NO. 117

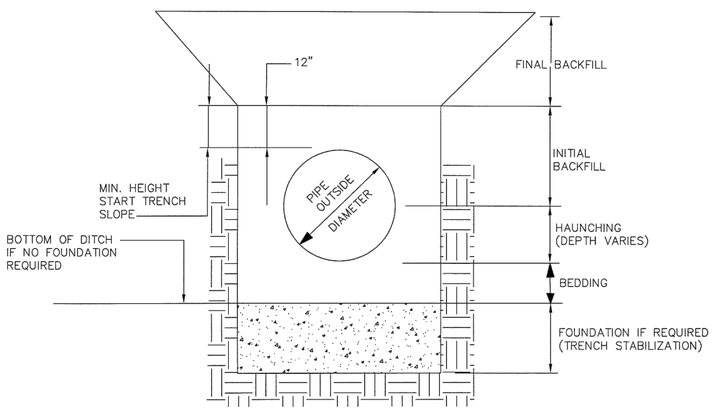

NOTE: SEE DETAIL # 103 AND #109 FOR DIMENSIONS AND MATERIALS

FULTON COUNTY STANDARD DETAIL 108
TRENCH TERMINOLOGY

DATE	REVISIONS	DATE	REVISIONS

DGS/DRN/CHKD: JM
APPROVED: REW
DATE: 12-2-05

FULTON COUNTY

FULTON COUNTY PUBLIC WORKS
141 PRYOR ST. ATLANTA, GA. 30303
404-730-7400 FAX: 404-224-0498

DRAWING NO. 108

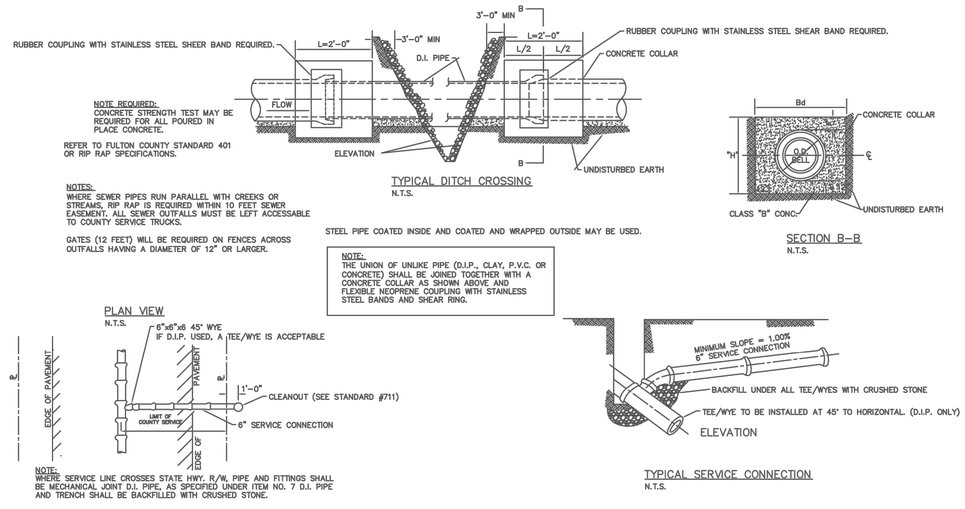

NOTE:
WHERE SERVICE LINE CROSSES STATE HWY. R/W, PIPE AND FITTINGS SHALL BE MECHANICAL JOINT D.I. PIPE, AS SPECIFIED UNDER ITEM NO. 7 D.I. PIPE AND TRENCH SHALL BE BACKFILLED WITH CRUSHED STONE.

NOTE REQUIRED:
CONCRETE STRENGTH TEST MAY BE REQUIRED FOR ALL POURED IN PLACE CONCRETE.

REFER TO FULTON COUNTY STANDARD 401 OR RIP RAP SPECIFICATIONS.

NOTES:
WHERE SEWER PIPES RUN PARALLEL WITH CREEKS OR STREAMS, RIP RAP IS REQUIRED WITHIN 10 FEET SEWER EASEMENT. ALL SEWER OUTFALLS MUST BE LEFT ACCESSABLE TO COUNTY SERVICE TRUCKS.

GATES (12 FEET) WILL BE REQUIRED ON FENCES ACROSS OUTFALLS HAVING A DIAMETER OF 12" OR LARGER.

STEEL PIPE COATED INSIDE AND COATED AND WRAPPED OUTSIDE MAY BE USED.

NOTE:
THE UNION OF UNLIKE PIPE (D.I.P., CLAY, P.V.C. OR CONCRETE) SHALL BE JOINED TOGETHER WITH A CONCRETE COLLAR AS SHOWN ABOVE AND FLEXIBLE NEOPRENE COUPLING WITH STAINLESS STEEL BANDS AND SHEAR RING.

FULTON COUNTY STANDARD DETAIL 118
PIPE SEWER DATA

DATE	REVISIONS	DATE	REVISIONS
8/08	NRR		

DGS/DRN/CHKD: REB
APPROVED: REW
DATE: 12-2-05

FULTON COUNTY

FULTON COUNTY PUBLIC WORKS
141 PRYOR ST. ATLANTA, GA. 30303
404-612-7400 FAX: 404-224-0498

DRAWING NO. 118

PERMIT SET

SANDY SPRINGS
GEORGIA

GEORGIA REGISTERED LANDSCAPE ARCHITECT No. 1339 ROBERT BRADLEY JONES
GSWCC: #31792
10/21/2019 SEAL

MARK	DESCRIPTION	DATE	APPR.
0	BID SET	2019.10.16	

DATE: OCTOBER 16, 2019
SOLICITATION NO.: -
CONTRACT NO.: -
FILE NUMBER: -
PLOT DATE: 10/21/2019

DESIGNED BY: PBT
DWN BY: PBT
CKD BY: RBJ
SUBMITTED BY: PBT
FILE NAME: C-501.dwg
SIZE: 22" x 34"
PLOT SCALE: 1:1

CITY OF SANDY SPRINGS
1 GALAMBOS WAY
SANDY SPRINGS, GA 30328

POND
3500 Parkway Lane
Peachtree Corners, GA
30092 SUITE 100
Phone 678.336.7740
Fax 678.336.7744
POND PROJECT No.1190708

HERITAGE PARK IMPROVEMENTS

SITE DETAILS

SHEET IDENTIFICATION NUMBER
C-503

FILE PATH: \\ACP3SERVER\RESOURCES\PROJECTS\FY19\1190708\04.CAD_BIM\04.02.CAD\C-501.DWG PLOTTED BY: JONES, BRAD

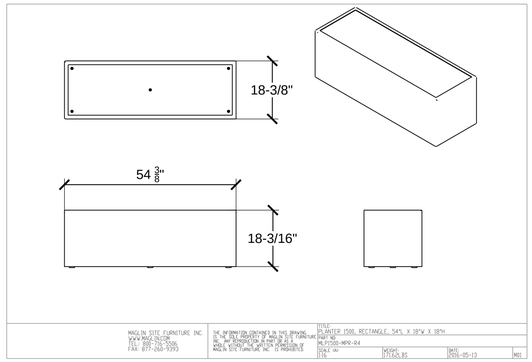

NOTES:
1. PLANTER TO BE SURFACE MOUNTED TO PAVEMENT.
2. BRONZE 14 FINE TEXTURED MATTE FINISH.
3. ALTERNATE PLANTER MUST BE APPROVED DURING BIDDING PHASE BY OWNER.

C1 VEGETATED SCREEN- PLANTER
SCALE: 1/2" = 1'-0"

0 1' 2' 4' 6'

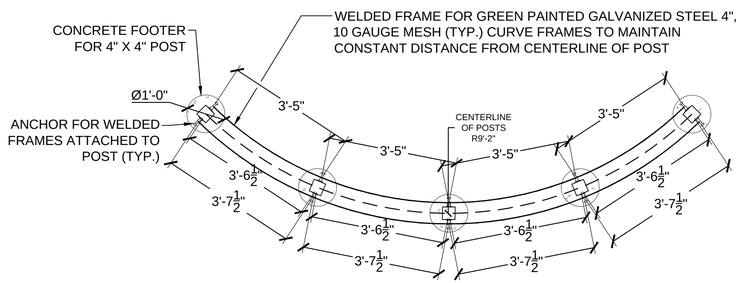

B1 VEGETATED SCREEN- PLAN VIEW
SCALE: 1/2" = 1'-0"

0 1' 2' 4' 6'

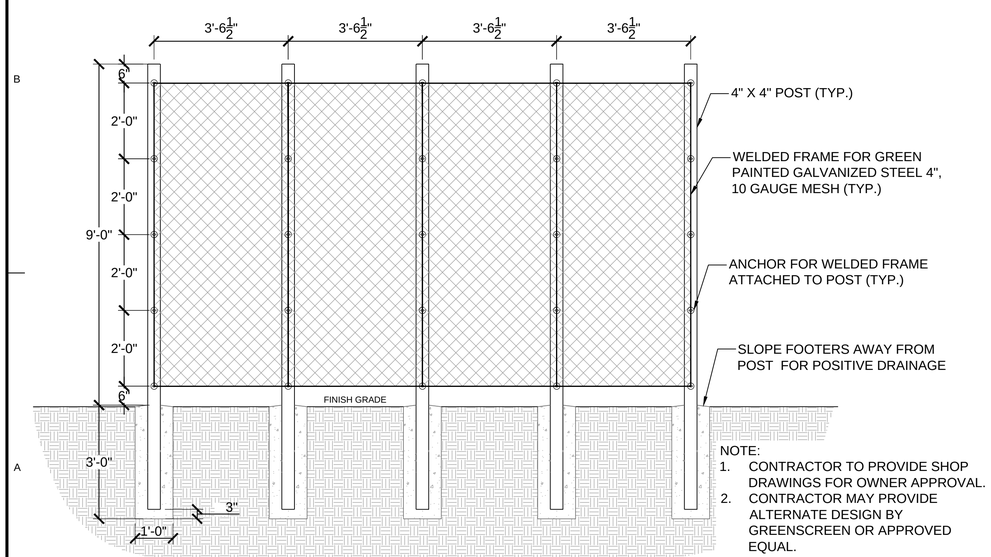

NOTE:
1. CONTRACTOR TO PROVIDE SHOP DRAWINGS FOR OWNER APPROVAL.
2. CONTRACTOR MAY PROVIDE ALTERNATE DESIGN BY GREENSCREEN OR APPROVED EQUAL.

A1 VEGETATED SCREEN- ELEVATION
SCALE: 1/2" = 1'-0"

0 1' 2' 4' 6'

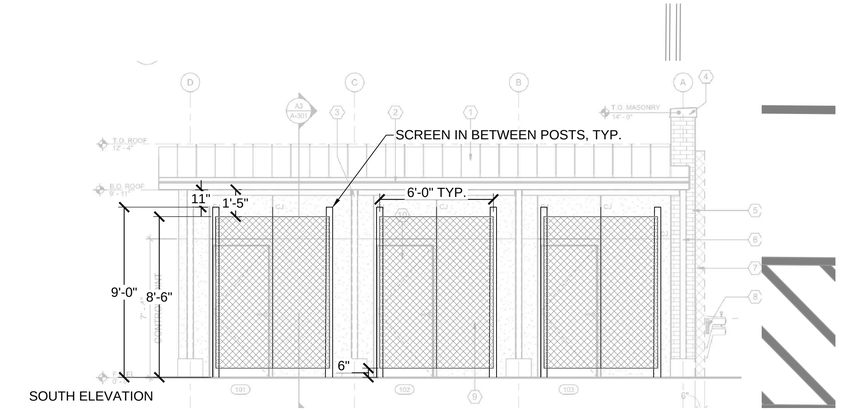

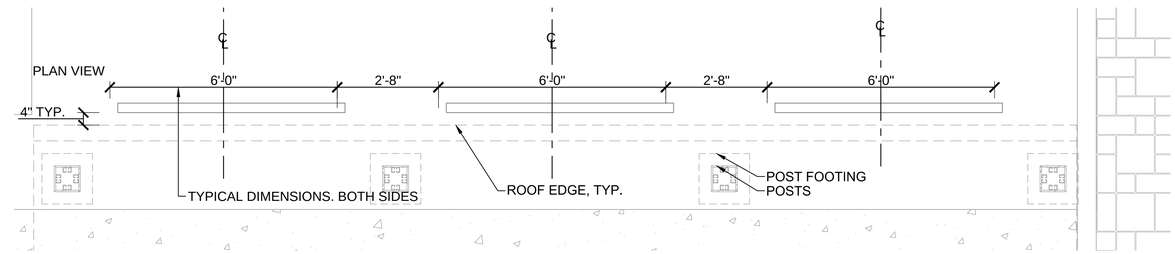

C3 VEGETATED SCREEN- FREESTANDING MODULAR PANELS
SCALE: N.T.S.

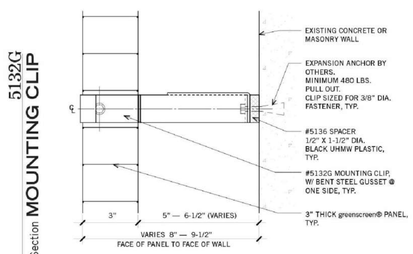

#5132G MOUNTING CLIP - WALL MOUNTED
PLAN

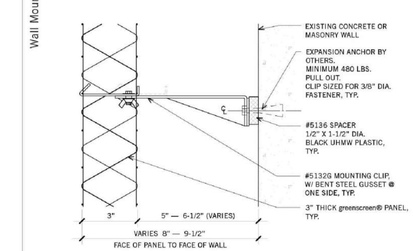

#5132G MOUNTING CLIP - WALL MOUNTED
SECTION

5132G
Wall Mounted, Plan & Section MOUNTING CLIP
FALL 2015

*Fasteners and expansion anchors by others.

*Used to hold panels off face of wall or structure a maximum of 9-1/2".

*At stucco and plaster locations clips should be mounted into solid blocking, sheathing or wall studs.

NOTE: Mounting hole in clip is sized for maximum 3/8" diameter fastener.

greenscreen® 1743 S. La Cienega Blvd. Los Angeles CA 90035 T - 800.450.3494 www.greenscreen.com

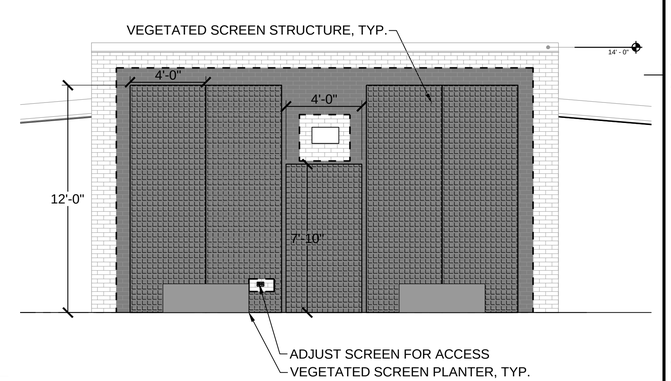

A3 VEGETATED SCREEN- MODULAR PANELS ON BUILDING
SCALE: N.T.S.

PERMIT SET

SANDY SPRINGS GEORGIA

GEORGIA REGISTERED LANDSCAPE ARCHITECT No. 1339 ROBERT BRADLEY JONES
GSWCC: #31792
10/21/2019 SEAL

MARK	DESCRIPTION	DATE	APPR.
0	BID SET	2019.10.16	

DESIGNED BY: PBT
DWN BY: PBT
CKD BY: RBJ
SUBMITTED BY: PBT
DATE: OCTOBER 16, 2019
SOLICITATION NO.: -
CONTRACT NO.: -
FILE NUMBER: -
FILE NAME: C-501.dwg
SIZE: 22" x 34"
PLOT SCALE: 1:1
PLOT DATE: 10/21/2019

CITY OF SANDY SPRINGS
1 GALAMBOS WAY
SANDY SPRINGS, GA 30328

POND
3500 Parkway Lane
Peachtree Corners, GA
30092-2688
Phone 678.336.7140
Fax 678.336.7144
POND PROJECT No.11907.08

HERITAGE PARK IMPROVEMENTS

SITE DETAILS

SHEET IDENTIFICATION NUMBER
C-504

FILE PATH: \\ACP3SERVER\RESOURCES\PROJECTS\FY19\11907.08\04.CAD_BIM\04.02.CAD\C-501.DWG PLOTTED BY: JONES, BRAD

NOTES:
1. INSTALL PER MANUFACTURER RECOMMENDATIONS.
2. MANUFACTURER:
ELKAY OUTDOOR EZH20 LK4420BF1U - COLOR GRAY
3. ALTERNATE MAY BE SUBMITTED DURING BIDDING PHASE FOR APPROVAL.

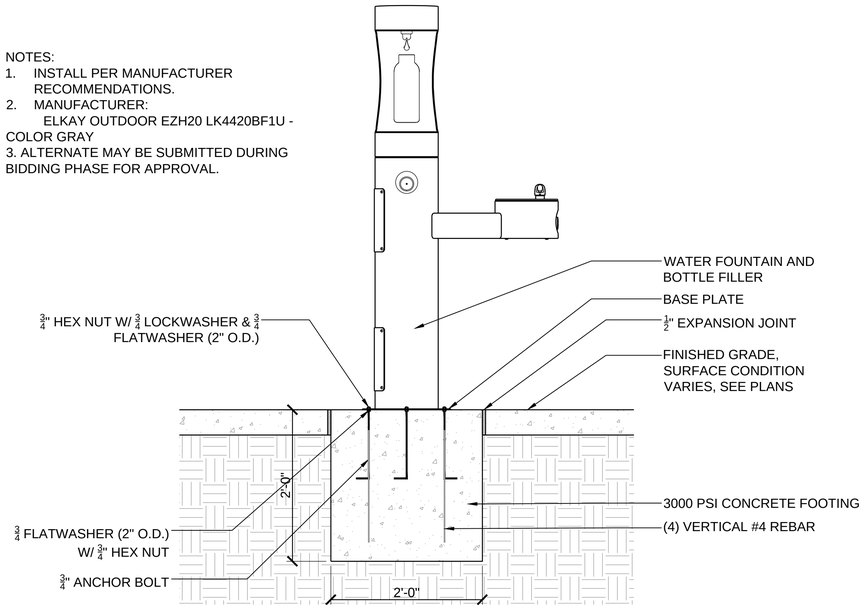

C1 FREESTANDING WATER FOUNTAIN
SCALE: N.T.S.

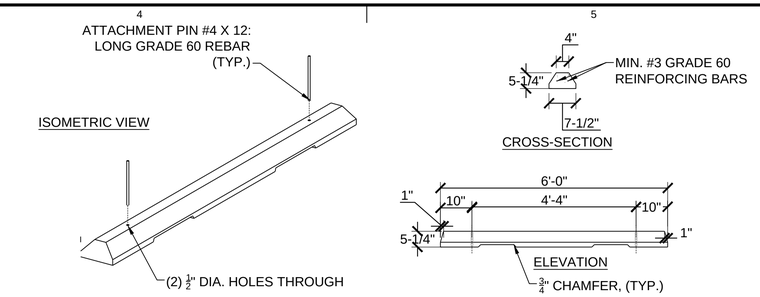

GENERAL NOTES:
1. CONCRETE FOR WHEEL STOP: MIN. 3000 PSI.
2. REINFORCING STEEL: PER ASTM A615, GRADE 60.
3. ATTACHMENT PINS SHALL HAVE 7-INCH EMBEDMENT.
4. INSTALL PER MANUFACTURER RECOMMENDATIONS.

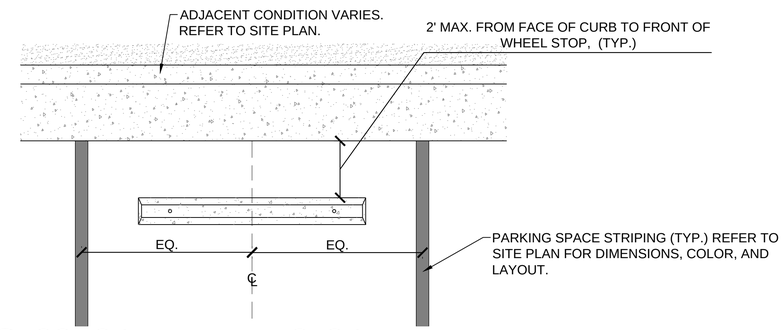

C4 CONCRETE WHEEL STOP
NO SCALE

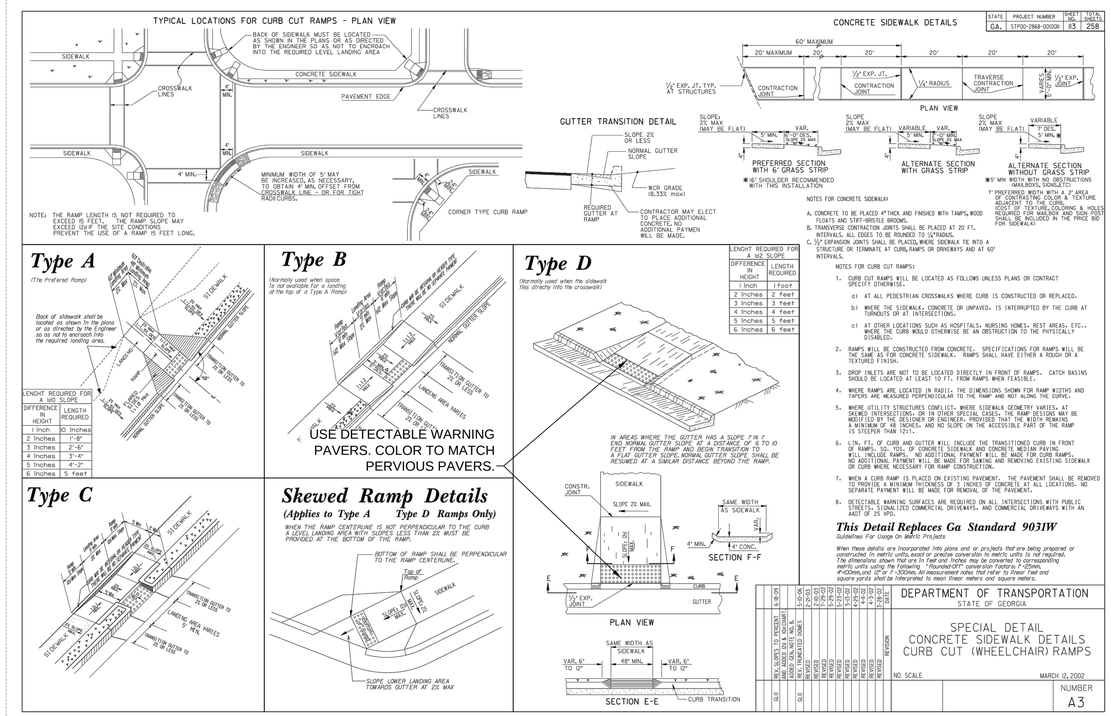

A1 CURB RAMP - TYPE D
NO SCALE

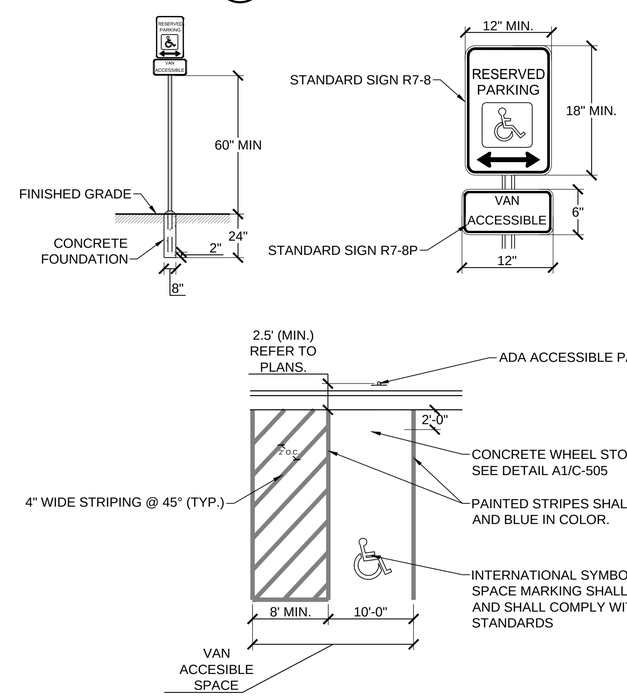

NOTES:
1. REFER TO SITE PLANS FOR LOCATION OF ACCESSIBLE PARKING SPACES. SEE LAYOUT ON CS-101 FOR DETAILED CONFIGURATION OF SPACES, STRIPING, WALKS, SIGN PLACEMENT, AND ADA RAMP.
2. HANDICAP PARKING AREA AS DIMENSIONED SHALL NOT EXCEED 2% SLOPE IN ANY DIRECTION.
3. ADA SYMBOL TO BE PROPORTIONAL TO LAYOUT SHOWN ON DETAIL.
4. ALL SIGNS TO BE .08" THICK ALUMINUM
5. ALL SIGNS SHALL CONFORM WITH ALL CURRENT ADA FEDERAL, STATE, AND LOCAL CODES & REGULATIONS.
6. PLACE "VAN ACCESSIBLE" SIGN IN FRONT OF VAN ACCESSIBLE SPACES ONLY.

A3 ADA PARKING
NO SCALE

PERMIT SET

SANDY SPRINGS GEORGIA

GEORGIA REGISTERED No. 1339 LANDSCAPE ARCHITECT ROBERT BRADLEY JONES
GSWCC: #31792
10/21/2019 SEAL

MARK	DESCRIPTION	DATE	APPR.
0	BID SET	2019.10.16	

DESIGNED BY: PBT
DWN BY: PBT
CKD BY: RBJ
SUBMITTED BY: PBT
FILE NAME: S2001.dwg
SCALE: 22" x 34" 1:1
DATE: OCTOBER 16, 2019
SOLICITATION NO.: -
CONTRACT NO.: -
FILE NUMBER:
PLOT DATE: 10/21/2019
PLOT SCALE:

CITY OF SANDY SPRINGS
1 GALAMBOS WAY
SANDY SPRINGS, GA 30328

POND
3500 Parkway Lane
Peachtree Corners, GA
30092-2688
Phone 678.336.7740
Fax 678.336.7744
POND PROJECT No.1190708

HERITAGE PARK IMPROVEMENTS

SITE DETAILS

SHEET IDENTIFICATION NUMBER
C-505

FILE PATH:\\ACP3SERVER\RESOURCES\PROJECTS\FY19\1190708\04.CAD_BIM\04.02.CAD\C-501.DWG PLOTTED BY: JONES, BRAD

EROSION, SEDIMENTATION & POLLUTION CONTROL PLAN CHECKLIST
STAND ALONE CONSTRUCTION PROJECTS

SWCD: FULTON COUNTY SOIL AND WATER CONSERVATION DISTRICT

Project Name: HERITAGE SANDY SPRINGS PARK **Address:** 6104 BLUE STONE ROAD, SANDY SPRINGS GA 30328

City/County: SANDY SPRINGS/ FULTON COUNTY **Date on Plans:** SEPTEMBER 24, 2019

Name & email of person filling out checklist: BRAD JONES / JONESB@PONDCO.COM

Plan Included

TO BE SHOWN ON ES&PC PLAN

Page #	Y/N	
CE001	Y	1 The applicable Erosion, Sedimentation and Pollution Control Plan Checklist established by the Commission as of January 1 of the year in which the land-disturbing activity was permitted. (The completed Checklist must be submitted with the ES&PC Plan or the Plan will not be reviewed)
ALL	Y	2 Level II certification number issued by the Commission, signature and seal of the certified design professional. (Signature, seal and Level II number must be on each sheet pertaining to ES&PC plan or the Plan will not be reviewed)
N/A	N	3 Limits of disturbance shall be no greater than 50 acres at any one time without prior written authorization from the EPD District Office. If EPD approves the request to disturb 50 acres or more at any one time, the Plan must include at least 4 of the BMPs listed in Appendix 1 of this checklist.* (A copy of the written approval by EPD must be attached to the plan for the Plan to be reviewed.)
CE002	Y	4 The name and phone number of the 24-hour local contact responsible for erosion, sedimentation and pollution controls.
CE002	Y	5 Provide the name, address, email address, and phone number of primary permittee.
CE002	Y	6 Note total and disturbed acreage of the project or phase under construction.
CE002	Y	7 Provide the GPS location of the construction exit for the site. Give the Latitude and Longitude in decimal degrees.
ALL	Y	8 Initial date of the Plan and the dates of any revisions made to the Plan including the entity who requested the revisions.
CE002	Y	9 Description of the nature of construction activity.
CE004	Y	10 Provide vicinity map showing site's relation to surrounding areas. Include designation of specific phase, if necessary.
CE002	Y	11 Identify the project receiving waters and describe all sensitive adjacent areas including streams, lakes, residential areas, wetlands, marshlands, etc. which may be affected.
CE004	Y	12 Design professional's certification statement and signature that the site was visited prior to development of the ES&PC Plan as stated on Part IV page 19 of the permit.
CE004	Y	13 Design professional's certification statement and signature that the permittee's ES&PC Plan provides for an appropriate and comprehensive system of BMPs and sampling to meet permit requirements as stated on Part IV page 19 of the permit.*
CE004	Y	14 Clearly note the statement that "The design professional who prepared the ES&PC Plan is to inspect the installation of the initial sediment storage requirements and perimeter control BMPs within 7 days after installation." in accordance with Part IV.A.5 page 25 of the permit.*
CE004	Y	15 Clearly note the statement that "Non-exempt activities shall not be conducted within the 25 or 50-foot undisturbed stream buffers as measured from the point of wrested vegetation or within 25-feet of the coastal marshland buffer as measured from the Jurisdictional Determination Line without first acquiring the necessary variances and permits."
CE103	Y	16 Provide a description of any buffer encroachments and indicate whether a buffer variance is required.
N/A	N	17 Clearly note the statement that "Amendments/revisions to the ES&PC Plan which have a significant effect on BMPs with a hydraulic component must be certified by the design professional."*
N/A	N	18 Clearly note the statement that "Waste materials shall not be discharged to waters of the State, except as authorized by a Section 404 permit."*
CE004	Y	19 Clearly note statement that "The escape of sediment from the site shall be prevented by the installation of erosion and sediment control measures and practices prior to land disturbing activities."
CE004	Y	20 Clearly note statement that "Erosion control measures will be maintained at all times. If full implementation of the approved Plan does not provide for effective erosion control, additional erosion and sediment control measures shall be implemented to control or treat the sediment source."
CE004	Y	21 Clearly note the statement "Any disturbed area left exposed for a period greater than 14 days shall be stabilized with mulch or temporary seeding."
N/A	N	22 Any construction activity which discharges storm water into an Impaired Stream Segment, or within 1 linear mile upstream of and within the same watershed as, any portion of an Biota Impaired Stream Segment must comply with Part III. C. of the permit. Include the completed Appendix 1 listing all the BMPs that will be used for those areas of the site which discharge to the Impaired Stream Segment.*
N/A	N	23 If a TMDL Implementation Plan for sediment has been finalized for the Impaired Stream Segment (identified in Item 22 above) at least six months prior to submittal of NOI, the ES&PC Plan must address any site-specific conditions or requirements included in the TMDL Implementation Plan.*
N/A	N	24 BMPs for concrete washdown of tools, concrete mixer chutes, hoppers and the rear of the vehicles. Washout of the drum at the construction site is prohibited.*
CE002-03	Y	25 Provide BMPs for the remediation of all petroleum spills and leaks.
N/A	N	26 Description of the measures that will be installed during the construction process to control pollutants in storm water that will occur after construction operations have been completed.*
N/A	N	27 Description of practices to provide cover for building materials and building products on site.*
N/A	N	28 Description of the practices that will be used to reduce the pollutants in storm water discharges.*
CE004	Y	29 Description and chart or timeline of the intended sequence of major activities which disturb soils for the major portions of the site (i.e., initial perimeter and sediment storage BMPs, clearing and grubbing activities, excavation activities, utility activities, temporary and final stabilization).
N/A	N	30 Provide complete requirements of inspections and record keeping by the primary permittee.*
N/A	N	31 Provide complete requirements of sampling frequency and reporting of sampling results.*
N/A	N	32 Provide complete details for retention of records as per Part IV.F. of the permit.*
N/A	N	33 Description of analytical methods to be used to collect and analyze the samples from each location.*
N/A	N	34 Appendix B rationale for NTU values at all outfall sampling points where applicable.*
N/A	N	35 Delineate all sampling locations, perennial and intermittent streams and other water bodies into which storm water is discharged.*
N/A	N	36 A description of appropriate controls and measures that will be implemented at the construction site including: (1) initial sediment storage requirements and perimeter control BMPs, (2) intermediate grading and drainage BMPs, and (3) final BMPs. For construction sites where there will be no mass grading and the initial perimeter control BMPs, intermediate grading and drainage BMPs, and final BMPs are the same, the Plan may combine all of the BMPs into a single phase.*
CE101	Y	37 Graphic scale and North arrow.
CE101	Y	38 Existing and proposed contour lines with contour lines drawn at an interval in accordance with the following:

Map Scale	Ground Slope	Contour Intervals, ft.
1 inch = 100ft or larger scale	Flat 0 - 2%	0.5 or 1
	Rolling 2 - 8%	1 or 2
	Steep 8% +	2,5 or 10

N/A	N	39 Use of alternative BMPs whose performance has been documented to be equivalent to or superior to conventional BMPs as certified by a Design Professional (unless disapproved by EPD or the Georgia Soil and Water Conservation Commission). Please refer to the Alternative BMP Guidance Document found at www.gaswcc.org.
N/A	N	40 Use of alternative BMP for application to the Equivalent BMP List. Please refer to Appendix A-2 of the Manual for Erosion & Sediment Control in Georgia 2016 Edition.*
CE101	Y	41 Delineation of the applicable 25-foot or 50-foot undisturbed buffers adjacent to state waters and any additional buffers required by the Local Issuing Authority. Clearly note and delineate all areas of impact.
N/A	N	42 Delineation of on-site wetlands and all state waters located on and within 200 feet of the project site.
CE101	Y	43 Delineation and acreage of contributing drainage basins on the project site.
N/A	N	44 Provide hydrology study and maps of drainage basins for both the pre- and post-developed conditions.*
CE002	Y	45 An estimate of the runoff coefficient or peak discharge flow of the site prior to and after construction activities are completed.
N/A	N	46 Storm-drain pipe and weir velocities with appropriate outlet protection to accommodate discharges without erosion. Identify/Delineate all storm water discharge points.
CE101	Y	47 Soil series for the project site and their delineation.
CE101	Y	48 The limits of disturbance for each phase of construction.
CE002	Y	49 Provide a minimum of 67 cubic yards of sediment storage per acre drained using a temporary sediment basin, retrofitted detention pond, and/or excavated inlet sediment traps for each common drainage location. Sediment storage volume must be in place prior to and during all land disturbance activities until final stabilization of the site has been achieved. A written justification explaining the decision to use equivalent controls when a sediment basin is not attainable must be included in the Plan for each common drainage location in which a sediment basin is not provided. A written justification as to why 67 cubic yards of storage is not attainable must also be given. Worksheets from the Manual included for structural BMPs and all calculations used by the storage design professional to obtain the required sediment when using equivalent controls. When discharging from sediment basins and impoundments, permittees are required to utilize outlet structures that withdraw water from the surface, unless infeasible. If outlet structures that withdraw water from the surface are not feasible, a written justification explaining this decision must be included in the Plan.
CE101	Y	50 Location of Best Management Practices that are consistent with and no less stringent than the Manual for Erosion and Sediment Control in Georgia. Use uniform coding symbols from the Manual, Chapter 6, with legend.
CE500 SERIES	Y	51 Provide detailed drawings for all structural practices. Specifications must, at a minimum, meet the guidelines set forth in the Manual for Erosion and Sediment Control in Georgia.
LP101, CE101, & CE501	Y	52 Provide vegetative plan, noting all temporary and permanent vegetative practices. Include species, planting dates and seeding, fertilizer, lime and mulching rates. Vegetative plan shall be site specific for appropriate time of the year that seeding will take place and for the appropriate geographic region of Georgia.

*If using this checklist for a project that is less than 1 acre and not part of a common development but within 200 ft of a perennial stream the * checklist items would be N/A.

Effective January 1, 2019

NOTE: TOTAL DISTURBANCE IS 0.10 ACRES WITHIN 200 FEET OF A PERENNIAL STREAM BUT IS NOT PART OF A COMMON DEVELOPMENT, THEREFORE CHECKLIST ITEMS WITH * ARE NOTED AS N/A.

STRUCTURAL PRACTICES

CODE	PRACTICE	DETAIL	MAP SYMBOL	DESCRIPTION
Co	CONSTRUCTION EXIT	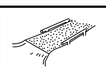	Co (LABEL)	A crushed stone pad located at the construction site exit to provide a place for removing mud from tires thereby protecting public streets.
Sd1	SEDIMENT BARRIER	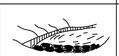	(INDICATE TYPE)	A barrier to prevent sediment from leaving the construction site. It may be sandbags, bales of straw or hay, brush, logs and poles, gravel, or a silt fence.

VEGETATIVE PRACTICES

CODE	PRACTICE	DETAIL	MAP SYMBOL	DESCRIPTION
Ds1	DISTURBED AREA STABILIZATION (WITH MULCHING ONLY)		Ds1	Establishing temporary protection for disturbed areas where seedlings may not have a suitable growing season to produce an erosion retarding cover.
Ds2	DISTURBED AREA STABILIZATION (WITH TEMP SEEDING)		Ds2	Establishing a temporary vegetative cover with fast growing seedings on disturbed areas.
Ds3	DISTURBED AREA STABILIZATION (WITH PERM SEEDING)		Ds3	Establishing a permanent vegetative cover such as trees, shrubs, vines, grasses, or legumes on disturbed areas.
Ds4	DISTURBED AREA STABILIZATION (SODDING)	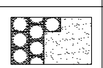	Ds4	A permanent vegetative cover using sods on highly erodable or critically eroded lands.
Du	DUST CONTROL ON DISTURBED AREAS	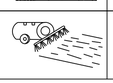	Du	Controlling surface and air movement of dust on construction site, roadways and similar sites.

DESIGN PROFESSIONAL:
BRAD JONES, PL.A.
LEVEL II CERTIFICATION
No.: 000031792

PERMIT SET

SANDY SPRINGS GEORGIA

GEORGIA REGISTERED No. 1339 LANDSCAPE ARCHITECT ROBERT BRADLEY JONES

GSWCC: #31792
10/21/2019 SEAL

MARK	DESCRIPTION	DATE	APPR.
0	BID SET	2019.10.16	

DESIGNED BY: PBT
DWN BY: PBT
CKD BY: RBJ
SUBMITTED BY: PBT
DATE: OCTOBER 16, 2019
SOLICITATION NO.: -
CONTRACT NO.: -
FILE NUMBER: -
FILE NAME: CE001.dwg
SIZE: 22" x 34" L1
PLOT SCALE: 1:1
PLOT DATE: 10/21/2019

CITY OF SANDY SPRINGS
1 GALAMBOS WAY
SANDY SPRINGS, GA 30328

POND
3500 Parkway Lane
Peachtree Corners, GA 30092, Suite 400
Phone 678.336.7740
Fax 678.336.7744
POND PROJECT No.1190708

HERITAGE PARK IMPROVEMENTS

EROSION CONTROL CHECKLIST

SHEET IDENTIFICATION NUMBER
CE001

FILE PATH: \\ACP3SERVER\RESOURCES\PROJECTS\FY19\1190708\04.CAD_BIM\04.02.CAD\CE001.DWG PLOTTED BY: JONES, BRAD

EROSION, SEDIMENTATION, AND POLLUTION CONTROL PLAN GENERAL NOTES
(IN CONFORMANCE WITH STATE OF GEORGIA GENERAL NPDES PERMIT NO. GAR 100001.)

OWNER/PRIMARY PERMITTEE:
CITY OF SANDY SPRINGS
SANDY SPRINGS CITY HALL
1 GALAMBOS WAY
SANDY SPRINGS, GA 30328
CONTACT: MIKE PERRY
(PH) 770.2335.3557 EMAIL: MPERRY@SANDYSPRINGSGA.GOV

DESIGN PROFESSIONAL:
POND & COMPANY
3500 PARKWAY LANE, SUITE 500
PEACHTREE CORNERS, GA 30092
(T) 678.336.7740
CONTACT: BRAD JONES, PLA
LEVEL II CERTIFICATION NO: 000031792
EXPIRES: 01/12/2022
GENERAL CONTRACTOR: TBD
24-HOUR EROSION AND SEDIMENT CONTROL CONTACT:
BRAD JONES, PLA
PROJECT MANAGER
(PH) 404.748.4747 / (CELL) 404.395.3305

AREA OF ON-SITE WETLANDS: 0 ACRES
PROJECT SITE AREA: .5663 ACRES
TOTAL DISTURBED PROJECT SITE AREA: .10 ACRES

EXISTING LAND USE:
THE EXISTING SITE IS CITY PARK WITH AN AMPHITHEATER AND STAGE.
PROPOSED LAND USE:
THE PROPOSED USE OF THE SITE WILL REMAIN THE SAME. THE PROJECT INCLUDES RESTROOMS WITH NEW ADA-COMPLIANT WALKWAYS, PERVIOUS PAVERS, SEATWALLS, AND NEW LANDSCAPE.

GPS COORDINATES OF CONSTRUCTION EXIT: 33°55'17.23"N, 84°22'57.69"W (33.9214, -84.3826)

NAME OF RECEIVING WATERS: UNNAMED TRIBUTARY OF LONG ISLAND CREEK. .THESE SUPPORT WARM WATER FISHERIES

PRE-CONSTRUCTION CURVE NUMBER: 88.2
POST-CONSTRUCTION CURVE NUMBER: 89.1

STATE WATERS EXIST ON OR WITHIN 200' OF THE PROJECT SITE.
THERE ARE NO WETLANDS WITHIN 200' OF THE PROJECT SITE.

THE RECEIVING WATERS FOR THIS PROJECT IS WITHIN ONE MILE OF AN IMPAIRED STREAM.

STRUCTURAL PRACTICES:
THE STRUCTURAL PRACTICES SHOWN ON THIS PLAN HAVE BEEN DESIGNED TO DIVERT FLOWS FROM EXPOSED SOILS, STORE FLOWS, OR OTHERWISE LIMIT RUNOFF AND THE DISCHARGE OF POLLUTANTS FROM EXPOSED AREAS OF THE SITE. FOR SEDIMENT AND EROSION CONTROL PURPOSES, STRUCTURAL PRACTICES HAVE BEEN SHOWN IN THREE PHASES, BASED ON CONSTRUCTION ACTIVITIES. THESE PHASES INCLUDE INITIAL, INTERMEDIATE AND FINAL EROSION & SEDIMENT CONTROL PHASES, BUT ARE ALL SHOWN ON ONE SHEET DUE TO SIZE OF PROJECT.

DURING THE INITIAL PHASE, NO CONSTRUCTION EXIT WILL BE INSTALLED AT THE ENTRANCES TO THE SITES. EXISTING DRIVES WILL BE USED FOR CONSTRUCTION ENTRANCES. A WASHDOWN AREA WILL STILL BE UTILIZED HOWEVER. DOUBLE-ROW SILT FENCE (SD1-S) WILL BE INSTALLED PRIOR TO CLEARING AND GRADING OPERATIONS TO KEEP SEDIMENT CONTAINED WITHIN THE SITE AS NECESSARY. DISTURBED AREA STABILIZATION SHALL BE STABILIZED WITH MULCH (Ds1), TEMPORARY SEEDING (Ds2) AND DUST CONTROL (Du) WILL BE UTILIZED DURING THIS PHASE.

DURING INTERMEDIATE PHASE, THE INITIAL MEASURES SHALL BE MAINTAINED AS NECESSARY TO ACHIEVE COMPLIANCE WITH THE CONDITIONS OF THE STATE OF GEORGIA NPDES PERMIT. DISTURBED AREAS SHALL BE STABILIZED WITH MULCH (Ds1), TEMPORARY SEEDING (Ds2), DUST CONTROL (Du), PERMANENT VEGETATIONS (Ds3), AND SODDING (Ds4) AS NECESSARY.

DURING FINAL PHASE, MOST OF THE CONSTRUCTION OPERATIONS HAVE BEEN COMPLETED AND ALL DISTURBED AREAS SHALL RECEIVE FINAL STABILIZATION. PERMANENT SEEDING SHALL BE INSTALLED OR REMAIN IN PLACE. CONTRACTOR TO COORDINATE WITH LANDSCAPE PLANS FOR PERMANENT LANDSCAPING.

SEDIMENT STORAGE:

AT THIS SITE, THE APPLICATION OF TEMPORARY SEDIMENT BASINS OR EXCAVATED INLET TRAPS WOULD BE INEFFICIENT AND COULD REQUIRE AN INCREASE IN DISTURBED AREA TO INSTALL AND MAINTAIN DUE TO THE NATURE OF THE WORK AND EXISTING TOPOGRAPHY. THE DISTURBED AREAS ARE LESS THAN 1 ACRE IN A CORNER OF THE PROPERTY AND THE RESULTING DRAINAGE CONSISTS OF PRIMARILY SHEET FLOW. THERE IS ONE AREA OF SIGNIFICANT CONCENTRATED FLOW FROM THE DISTURBED AREA INTO DRAINAGE OUTFALLS. IN ORDER TO CREATE SEDIMENT BASINS, EXCESSIVE GRADING WOULD BE REQUIRED TO DIRECT DRAINAGE INTO SUCH BASINS AND WOULD DISTURB THE OPEN NATURE OF THE SITE.

IN PLACE OF TRADITIONAL METHODS THE CONTRACTOR SHALL FOLLOW THESE STRICT GUIDELINES TO PREVENT SEDIMENT FROM LEAVING THE WORK AREAS.
1. PRIOR TO CLEARING, ALL SEDIMENT BARRIERS SHALL BE IN PLACE AT THE LIMITS OF DISTURBANCE.
2. AT THE END OF EVERY WORK DAY, ALL EXCAVATED AREAS SHALL BE BACKFILLED AND TEMPORARILY MULCHED AND SEEDED FOR STABILIZATION. ALL SILT FENCE DAMAGE IN THAT DAY'S WORK SHALL BE CLEANED OUT AND REPAIRED WHERE NEEDED.
3. PRIOR TO REACHING THE 14TH DAY OF DISTURBANCE, ALL DISTURBED AREAS SHALL BE PERMANENTLY MULCHED.
4. NO DRAINAGE WAYS SHALL BE BLOCKED FOR MORE THAN 1 WORKING DAY.
5. ALL AREAS WHERE STEEP SLOPES (GREATER THAN 3:1) ARE BEING DISTURBED, PERMANENT VEGETATION/SEEDING SHALL BE INSTALLED AFTER BACKFILLING IS COMPLETE.

CRITICAL WORK ZONE:
ALL SLOPES 3:1 OR STEEPER AND HIGHER THAN 5 FEET SHALL RECEIVE PERMANENT VEGETATION. SILT FENCING WILL BE USED TO PREVENT SEDIMENT FROM LEAVING THE DISTURBED AREA. CONCENTRATING CONCRETE WASHDOWN AREAS AT ENTRANCE AND MINIMIZING WORK NEAR STREAM BUFFERS OR SWALES WILL REDUCE THE CHANCE OF ANY POLLUTANTS MIGRATING WITHIN STORMWATER.

100-YR FLOODPLAIN DOES NOT EXIST ON THE SITE.
WETLANDS DO NOT EXIST ON THE SITE.

STORMWATER MANAGEMENT:
THE PROPOSED PROJECT WILL DRAIN TO AN UNNAMED TRIBUTARY OF LONG ISLAND CREEK.

POST-CONSTRUCTION STORMWATER POLLUTANT CONTROL:
THE PROPOSED PROJECT WILL DRAIN TO AN UNNAMED TRIBUTARY OF LONG ISLAND CREEK.

STABILIZATION MEASURES:
THE STABILIZATION MEASURES SHOWN ON THESE PLANS HAVE BEEN DESIGNED TO STABILIZE THE DISTURBED AREAS FOLLOWING THE TEMPORARY OR PERMANENT COMPLETION OF CONSTRUCTION. ALL EXPOSED AREAS SHALL BE STABILIZED WITH TEMPORARY MULCHING (DS1) PRIOR TO GRADING IF THEY ARE TO REMAIN INACTIVE FOR 14 DAYS OR MORE. ALL DISTURBED AREAS SHALL BE STABILIZED WITH TEMPORARY (DS2) OR PERMANENT (DS3) VEGETATION AS INDICATED ON THE PLAN. DITCHES, TEMPORARY DIVERSION BERMS, AND SLOPES (WHICH HAVE 3:1 OR STEEPER SLOPE AND 10 FEET OR MORE HEIGHT) ARE TO BE STABILIZED WITH EROSION CONTROL MATTING (SS). DUST CONTROL (DU) SHALL ALSO BE PROVIDED AS NEEDED DURING GRADING ACTIVITIES. SEE EROSION, SEDIMENTATION, AND POLLUTION CONTROL (ESPCP) DETAIL SHEETS FOR MORE DETAILS REGARDING THESE STABILIZATION MEASURES.

STABILIZATION MEASURES SHALL BE INITIATED AS SOON AS PRACTICABLE IN PORTIONS OF THE SITE WHERE CONSTRUCTION ACTIVITIES HAVE TEMPORARILY OR PERMANENTLY CEASED, BUT IN NO CASE MORE THAN 14 DAYS AFTER THE CONSTRUCTION ACTIVITY IN THAT PORTION OF THE SITE HAS TEMPORARILY OR PERMANENTLY CEASED, EXCEPT:

WHERE THE INITIATION OF STABILIZATION MEASURES BY THE 14TH DAY AFTER CONSTRUCTION ACTIVITY TEMPORARILY OR PERMANENTLY CEASED IS PRECLUDED BY SNOW COVER OR OTHER ADVERSE WEATHER CONDITIONS, STABILIZATION MEASURES SHALL BE INITIATED AS SOON AS PRACTICABLE.

WHERE CONSTRUCTION ACTIVITY WILL RESUME ON A PORTION OF THE SITE WITHIN 21 DAYS FROM WHEN ACTIVITIES CEASED (E.G. THE TOTAL TIME PERIOD THAT CONSTRUCTION ACTIVITY IS TEMPORARILY CEASED IS LESS THAN 21 DAYS) THEN STABILIZATION MEASURES DO NOT HAVE TO BE INITIATED ON THAT PORTION OF THE SITE BY THE 14TH DAY AFTER CONSTRUCTION ACTIVITY TEMPORARILY CEASED.

KEEPING PLANS CURRENT:
THE PRIMARY PERMITTEE(S) SHALL AMEND THEIR PLAN WHENEVER THERE IS A CHANGE IN DESIGN, CONSTRUCTION, OPERATION, OR MAINTENANCE, WHICH HAS A SIGNIFICANT EFFECT ON BMPS WITH A HYDRAULIC COMPONENT (I.E., THOSE BMPS WHERE THE DESIGN IS BASED UPON RAINFALL INTENSITY, DURATION AND RETURN FREQUENCY OF STORMS) OR IF THE PLAN PROVES TO BE INEFFECTIVE IN ELIMINATING OR SIGNIFICANTLY MINIMIZING POLLUTANTS FROM SOURCES IDENTIFIED UNDER PART IV.D.3. AMENDMENTS TO THE PLAN MUST BE CERTIFIED BY A DESIGN PROFESSIONAL AS PROVIDED IN THIS PERMIT.

PROPER OPERATION AND MAINTENANCE:
THE PERMITTEE SHALL AT ALL TIMES PROPERLY OPERATE AND MAINTAIN ALL FACILITIES AND SYSTEMS OF TREATMENT AND CONTROL (AND RELATED APPURTENANCES) WHICH ARE INSTALLED OR USED BY THE PERMITTEE TO ACHIEVE COMPLIANCE WITH THE CONDITIONS OF THIS PERMIT AND WITH THE REQUIRED PLANS. PROPER OPERATION AND MAINTENANCE ALSO INCLUDES ADEQUATE LABORATORY CONTROLS AND APPROPRIATE QUALITY ASSURANCE PROCEDURES. PROPER OPERATION AND MAINTENANCE REQUIRES THE OPERATION OF BACKUP OR AUXILIARY FACILITIES OR SIMILAR SYSTEMS, INSTALLED BY AN PERMITTEE ONLY WHEN NECESSARY TO ACHIEVE COMPLIANCE WITH THE CONDITIONS OF THE PERMIT.

EROSION AND SEDIMENT CONTROL MEASURES WILL BE MAINTAINED AT ALL TIMES. IF FULL IMPLEMENTATION OF THE APPROVED PLAN DOES NOT PROVIDE FOR EFFECTIVE EROSION AND SEDIMENT CONTROL, ADDITIONAL EROSION AND SEDIMENT CONTROL MEASURES SHALL BE IMPLEMENTED TO CONTROL OR TREAT THE SEDIMENT SOURCE.

REFER TO THE DETAILS CONTAINED WITHIN THIS PLAN SET FOR ADDITIONAL MAINTENANCE INSTRUCTION.

NON-STORM WATER DISCHARGES:
EXCEPT FOR FLOWS FROM FIRE FIGHTING ACTIVITIES, SOURCES OF NON-STORMWATER LISTED IN PART III.A.2. OF THIS PERMIT THAT ARE COMBINED WITH STORMWATER DISCHARGES ASSOCIATED WITH CONSTRUCTION ACTIVITY MUST BE IDENTIFIED IN THE PLAN. THE PLAN SHALL IDENTIFY AND ENSURE THE IMPLEMENTATION OF APPROPRIATE POLLUTION PREVENTION MEASURES FOR THE NON-STORMWATER COMPONENT(S) OF THE DISCHARGE.

WASTE MATERIALS AND DISPOSAL:

NOTHING IN THIS PERMIT RELIEVES A PERMITTEE FROM ANY OBLIGATION TO COMPLY WITH ALL APPLICABLE STATE AND LOCAL REGULATIONS OF WASTE DISPOSAL, SANITARY SEWER, SEPTIC AND PETROLEUM STORAGE SYSTEMS.

ALL WASTE MATERIALS SHALL BE COLLECTED AND STORED IN A SECURELY LIDDED METAL DUMPSTER OR OTHER APPROPRIATE WASTE MANAGEMENT FACILITY PERMISSIBLE UNDER GAR PERMIT NO. 100001. WASTE MANAGEMENT FACILITIES SHALL MEET ALL SOLID WASTE MANAGEMENT REGULATIONS. ALL TRASH AND CONSTRUCTION DEBRIS FROM THE SITE SHALL BE DEPOSITED IN THE WASTE MANAGEMENT FACILITIES. WASTE MANAGEMENT FACILITIES SHALL BE EMPTIED A MINIMUM OF ONCE PER WEEK OR MORE OFTEN IF NECESSARY AND TRASH SHALL BE HAULED AS REQUIRED BY LOCAL REGULATIONS. NO CONSTRUCTION WASTE SHALL BE BURIED ON-SITE.

ALL PERSONNEL SHALL BE INSTRUCTED ON PROPER PROCEDURES FOR WASTE DISPOSAL. A NOTICE STATING THESE PRACTICES SHALL BE POSTED AT THE JOB SITE AND THE CONTRACTOR SHALL BE RESPONSIBLE FOR SEEING THAT THESE PROCEDURES ARE FOLLOWED.

LOCATE WASTE COLLECTION AREAS AWAY FROM STREETS, GUTTERS, WATERCOURSES AND STORM DRAINS. WASTE COLLECTION AREAS, SUCH AS DUMPSTERS, ARE OFTEN BEST LOCATED NEAR CONSTRUCTION SITE ENTRANCES TO MINIMIZE TRAFFIC ON DISTURBED SOILS. THE PLAN SHOULD INCLUDE SECONDARY CONTAINMENT AROUND LIQUID WASTE COLLECTION AREAS TO FURTHER MINIMIZE THE LIKELIHOOD OF CONTAMINATED DISCHARGES. SOLID MATERIALS, INCLUDING BUILDING MATERIALS, SHALL NOT BE DISCHARGED TO WATERS OF THE STATE, EXCEPT AS AUTHORIZED BY A SECTION 404 PERMIT.

HAZARDOUS WASTES:
ALL HAZARDOUS WASTE MATERIALS SHALL BE DISPOSED OF IN THE MANNER AS REQUIRED BY LOCAL, STATE, AND/OR FEDERAL REGULATIONS AND BY THE MANUFACTURER OF SUCH PRODUCTS. THE JOB SITE SUPERINTENDENT, WHO WILL ALSO BE RESPONSIBLE FOR SEEING THAT THESE PRACTICES ARE FOLLOWED, SHALL INSTRUCT SITE PERSONNEL IN THESE PRACTICES. MATERIAL SAFETY DATA SHEETS (MSDS'S) FOR EACH SUBSTANCE WITH HAZARDOUS PROPERTIES THAT IS USED ON THE JOB SITE SHALL BE OBTAINED AND USED FOR THE PROPER MANAGEMENT OF POTENTIAL WASTES THAT MAY RESULT FROM THESE PRODUCTS. AN MSDS SHALL BE POSTED IN THE IMMEDIATE AREA WHERE SUCH PRODUCT IS STORED AND/OR USED AND ANOTHER COPY OF EACH MSDS SHALL BE MAINTAINED IN THE EROSION SEDIMENTATION AND POLLUTION CONTROL PLAN (ESPCP) FILE AT THE JOB SITE CONSTRUCTION TRAILER OFFICE. EACH EMPLOYEE WHO HANDLES A SUBSTANCE WITH HAZARDOUS PROPERTIES WILL BE INSTRUCTED ON THE USE OF MSDS SHEETS AND THE SPECIFIC INFORMATION IN THE APPLICABLE MSDS FOR THE PRODUCT HE/SHE IS USING, PARTICULARLY REGARDING SPILL CONTROL TECHNIQUES.

THE CONTRACTOR WILL IMPLEMENT THE SPILL PREVENTION CONTROL AND COUNTERMEASURES (SPCC) PLAN FOUND WITHIN THIS ESPCP AND WILL TRAIN ALL PERSONNEL IN THE PROPER CLEANUP AND HANDLING OF SPILLED MATERIALS. NO SPILLED HAZARDOUS MATERIALS OR HAZARDOUS WASTES SHALL BE ALLOWED TO COME IN CONTACT WITH STORM WATER DISCHARGES. IF SUCH CONTACT OCCURS, THE STORM WATER DISCHARGE SHALL BE CONTAINED ON SITE UNTIL APPROPRIATE MEASURES IN COMPLIANCE WITH STATE AND FEDERAL REGULATIONS ARE TAKEN TO DISPOSE OF SUCH CONTAMINATED STORM WATER. IT SHALL BE THE RESPONSIBILITY OF THE JOB SITE SUPERINTENDENT TO PROPERLY TRAIN ALL PERSONNEL IN THE USE OF THE SPCC PLAN.

NOTHING IN THIS PERMIT SHALL BE CONSTRUED TO PRECLUDE THE INSTITUTION OF ANY LEGAL ACTION OR RELIEVE THE PERMITTEE FROM ANY RESPONSIBILITIES, LIABILITIES, OR PENALTIES TO WHICH THE PERMITTEE IS OR MAY BE SUBJECT UNDER THE GEORGIA HAZARDOUS WASTE MANAGEMENT ACT, O.C.G.A. § 12-8-60, ET SEQ. OR UNDER CHAPTER 14 OF TITLE 12 OF THE OFFICIAL CODE OF GEORGIA ANNOTATED; NOR IS THE OPERATOR RELIEVED FROM ANY RESPONSIBILITIES, LIABILITIES OR PENALTIES TO WHICH THE PERMITTEE IS OR MAY BE SUBJECT UNDER SECTION 311 OF THE CLEAN WATER ACT OR SECTION 106 OF COMPREHENSIVE ENVIRONMENTAL RESPONSE COMPENSATION AND LIABILITY ACT.

ALL PERMITTEES ARE REQUIRED TO MINIMIZE THE DISCHARGE OF POLLUTANTS FROM DEWATERING TRENCHES AND EXCAVATIONS. DISCHARGES ARE PROHIBITED UNLESS MANAGED BY APPROPRIATE CONTROLS.

SANITARY WASTES:
ALL PERMITTEES SHALL ENSURE THAT THIS PLAN IS IN COMPLIANCE WITH APPLICABLE STATE AND/OR LOCAL WASTE DISPOSAL, SANITARY SEWER, OR SEPTIC SYSTEM REGULATIONS.

A MINIMUM OF ONE PORTABLE SANITARY UNIT SHALL BE PROVIDED FOR EVERY TEN (10) WORKERS ON THE SITE. ALL SANITARY WASTE SHALL BE COLLECTED FROM THE PORTABLE UNITS A MINIMUM OF ONE TIME PER WEEK BY A LICENSED PORTABLE FACILITY PROVIDER IN COMPLETE COMPLIANCE WITH THE LOCAL STATE REGULATIONS.

ALL SANITARY WASTE UNITS SHALL BE LOCATED IN AN AREA WHERE THE LIKELIHOOD OF THE UNIT CONTRIBUTING TO STORM WATER DISCHARGE IS NEGLIGIBLE. ADDITIONAL CONTAINMENT OF BMP'S SHALL BE IMPLEMENTED AS NECESSARY, SUCH AS GRAVEL BAGS OR SPECIFICALLY DESIGNED PLASTIC SKID CONTAINERS AROUND THE BASE, TO PREVENT WASTE FROM CONTRIBUTING TO STORM WATER DISCHARGES. THE LOCATION OF SANITARY WASTE UNITS MUST BE IDENTIFIED ON THE EROSION CONTROL PLAN GRADING PHASE BY THE CONTRACTOR ONCE THE LOCATIONS HAVE BEEN DETERMINED.

SANITARY SEWER SYSTEM UPGRADES ARE NOT INCLUDED IN THE PROJECT.

INVENTORY FOR POLLUTION PREVENTION PLAN
THE FOLLOWING MATERIALS ARE EXPECTED TO BE ONSITE DURING CONSTRUCTION: CONCRETE PRODUCTS, ASPHALT, PETROLEUM BASED FUELS AND LUBRICANTS FOR EQUIPMENT, TAR, METAL BUILDING MATERIALS, LUMBER, SHEET ROCK, FLOOR COVERINGS, ELECTRICAL WIRE AND FIXTURES, PAINTS/STAINS/FINISHING TREATMENTS, PAINT SOLVENTS, ADDITIVES FOR SOIL STABILIZATION, CLEANING SOLVENTS, PESTICIDES, FERTILIZERS, HERBICIDES, CRUSHED STONE, PLASTIC AND METAL PIPES.

OFFSITE VEHICLE TRACKING / DUST CONTROL
OFF-SITE VEHICLE TRACKING OF DIRT, SOILS, AND SEDIMENTS AND THE GENERATION OF DUST SHALL BE MINIMIZED OR ELIMINATED TO THE MAXIMUM EXTENT PRACTICAL. A STABILIZED CONSTRUCTION EXIT (CO) SHALL BE PROVIDED TO REDUCE VEHICLE TRACKING OF SEDIMENT. SEE ESPCP PLAN AND DETAIL SHEETS FOR THE CONSTRUCTION EXIT LOCATIONS AND DETAIL. THE PAVED STREET ADJACENT TO THE CONSTRUCTION EXIT SHALL BE INSPECTED DAILY BY A REPRESENTATIVE OF THE SITE CONTRACTOR FOR TRACKING OF MUD, DIRT, OR ROCK. DUMP TRUCKS HAULING MATERIAL FROM THE CONSTRUCTION SITE SHALL BE COVERED WITH A TARPAULIN. DUST CONTROL (DU) SHALL BE APPLIED AS NECESSARY TO PREVENT SURFACE AND AIR MOVEMENT OF DUST.

SPILL PREVENTION
PRACTICES SUCH AS GOOD HOUSEKEEPING, PROPER HANDLING OF HAZARDOUS PRODUCTS AND PROPER SPILL CONTROL PRACTICES WILL BE FOLLOWED TO REDUCE THE RISK OF SPILLS AND SPILLS FROM DISCHARGING INTO STORM WATER RUNOFF.

GOOD HOUSEKEEPING
A. QUANTITIES OF PRODUCTS STORED ONSITE WILL BE LIMITED TO THE AMOUNT NEEDED FOR THE JOB.
B. PRODUCTS AND MATERIALS WILL BE STORED IN A NEAT, ORDERLY MANNER IN APPROPRIATE CONTAINERS PROTECTED FROM RAINFALL, WHERE POSSIBLE.
C. PRODUCTS WILL BE KEPT IN THEIR ORIGINAL CONTAINERS WITH MANUFACTURER LABELS LEGIBLE AND VISIBLE.
D. PRODUCT MIXING, PRODUCT DISPOSAL, AND DISPOSAL OF PRODUCT CONTAINERS WILL BE ACCORDING TO THE MANUFACTURER'S RECOMMENDATIONS.
E. THE CONTRACTOR WILL INSPECT SUCH MATERIALS TO ENSURE PROPER USE, STORAGE AND DISPOSAL.

PRODUCT SPECIFIC PRACTICES
PETROLEUM BASED PRODUCTS - CONTAINERS FOR PRODUCTS SUCH AS FUELS, LUBRICANTS AND TARS WILL BE INSPECTED DAILY FOR LEAKS AND SPILLS. THIS INCLUDES ON-SITE VEHICLE AND MACHINERY DAILY INSPECTIONS AND REGULAR PREVENTATIVE MAINTENANCE OF SUCH EQUIPMENT. EQUIPMENT MAINTENANCE AREAS WILL BE LOCATED AWAY FROM STATE WATER, NATURAL DRAINS AND STORM WATER DRAINAGE INLETS. IN ADDITION, TEMPORARY FUELING TANKS SHALL HAVE A SECONDARY CONTAINMENT LINER TO PREVENT/MINIMIZE SITE CONTAINMENT. DISCHARGE OF OILS, FUELS AND LUBRICANTS IS PROHIBITED. PROPER DISPOSAL METHODS WILL INCLUDE COLLECTION IN A SUITABLE CONTAINER AND DISPOSAL AS REQUIRED BY LOCAL AND STATE REGULATIONS.

PAINTS/FINISHES/SOLVENTS - ALL PRODUCTS WILL BE STORED IN TIGHTLY SEALED ORIGINAL CONTAINERS WHEN NOT IN USE. EXCESS PRODUCT WILL NOT BE DISCHARGED INTO THE STORM WATER COLLECTION SYSTEM. EXCESS PRODUCT, MATERIALS USED WITH THESE PRODUCTS, AND PRODUCT CONTAINERS WILL BE DISPOSED ACCORDING TO MANUFACTURER'S SPECIFICATIONS AND RECOMMENDATIONS.

DESIGN PROFESSIONAL:
BRAD JONES, PL.A.
LEVEL II CERTIFICATION
No.: 000031792

PERMIT SET

SANDY SPRINGS
GEORGIA

GEORGIA REGISTERED No. 1339 LANDSCAPE ARCHITECT ROBERT BRADLEY JONES
GSWCC: #31792
10/21/2019 SEAL

MARK	DESCRIPTION	DATE	APPR.
0	BID SET	2019.10.16	

DESIGNED BY: PBT | DATE: OCTOBER 16, 2019
DWN BY: PBT | CKD BY: RBJ | SOLICITATION NO.: -
SUBMITTED BY: PBT | CONTRACT NO.: -
FILE NAME: C2001.dwg | FILE NUMBER: -
PLOT SCALE: 1:1 | PLOT DATE: 10/21/2019
SHEET SIZE: 22" x 34"

CITY OF SANDY SPRINGS
1 GALAMBOS WAY
SANDY SPRINGS, GA 30328

POND
3500 Parkway Lane
Peachtree Corners, GA 30092
Phone 678.336.7740
Fax 678.336.7744
POND PROJECT No. 1190708

HERITAGE PARK IMPROVEMENTS

EROSION CONTROL NOTES

SHEET IDENTIFICATION NUMBER
CE002

FILE PATH: \\ACP3SERVER\RESOURCES\PROJECTS\FY19\1190708\04.CAD_BIM\04.02.CAD\CE001.DWG PLOTTED BY: JONES, BRAD

EROSION, SEDIMENTATION, AND POLLUTION CONTROL PLAN GENERAL NOTES (CONTINUED FROM SHEET CE004)

(IN CONFORMANCE WITH STATE OF GEORGIA GENERAL NPDES PERMIT NO. GAR 100001)

CONCRETE/MASONRY - NO CONCRETE TRUCKS WILL BE ALLOWED TO WASH OUT OR DISCHARGE SURPLUS CONCRETE OR DRUM WASH WATER ON SITE. THE CONCRETE PROVIDER HAS RESPONSIBILITY TO ENSURE APPROPRIATE TRAINING HAS BEEN PROVIDED TO THEIR TRUCK DRIVERS, AND MUST PROVIDE APPROPRIATE DETAILS AND RESOURCES TO ENABLE THEM TO COMPLETE A DELIVERY WITHOUT CAUSING POLLUTION. CHUTES, BARRELS, WHEELBARROWS AND OTHER EQUIPMENT MUST BE RINSED IN THE SITE WASH-DOWN AREA. SWEEP OR SHOVEL ANY SPILLS THAT OCCUR AND ALLOW RESIDUE TO SET BEFORE REMOVING. THE HARDENED RESIDUE MAY THEN BE PLACED IN A DESIGNATED CONCRETE/MASONRY RECYCLING BIN ON SITE. DO NOT WASH CONCRETE/MASONRY INTO STORM DRAINS, OPEN DITCHES, STREETS, OR STREAMS. TRUCKS SHOULD NOT TRACK ANY CONCRETE OR MUD AND SEDIMENT OFF SITE.

FERTILIZER/HERBICIDES - THESE PRODUCTS WILL BE APPLIED AT RATES THAT DO NOT EXCEED THE MANUFACTURER'S SPECIFICATIONS, THE CROP ESTABLISHMENT GUIDELINES, OR THE SPECIFICATIONS CONTAINED WITHIN THE GSWCC MANUAL FOR EROSION AND SEDIMENT CONTROL IN GEORGIA.

BUILDING MATERIALS -

1. FOR BUILDING MATERIALS, BUILDING PRODUCTS, CONSTRUCTION WASTES, TRASH, LANDSCAPE MATERIALS, FERTILIZERS, PESTICIDES, HERBICIDES, DETERGENTS, SANITARY WASTE AND OTHER MATERIALS PRESENT ON THE SITE, PROVIDE COVER (E.G. PLASTIC SHEETING, TEMPORARY ROOFS) TO MINIMIZE THE EXPOSURE OF THESE PRODUCTS TO PRECIPITATION AND TO STORMWATER, OR SIMILAR EFFECTIVE MEANS DESIGNED TO MINIMIZE THE DISCHARGE OF POLLUTANTS FROM THESE AREAS. MINIMIZATION OF EXPOSURE IS NOT REQUIRED IN CASES WHERE EXPOSURE TO PRECIPITATION AND TO STORMWATER WILL NOT RESULT IN A DISCHARGE OF POLLUTANTS, OR WHERE EXPOSURE OF A SPECIFIC MATERIAL OR PRODUCT POSES LITTLE RISK TO STORMWATER CONTAMINATION (SUCH AS FINAL PRODUCTS AND MATERIALS INTENDED FOR OUTDOOR USE).
2. NO BUILDING MATERIAL OR CONSTRUCTION MATERIALS WILL BE BURIED OR DISPOSED OF ON-SITE. ALL SUCH MATERIAL WILL BE DISPOSED OF USING PROPER WASTE DISPOSAL PROCEDURES.

SPILL PREVENTION CONTROL AND COUNTERMEASURES (SPCC) PLAN:

A. LOCAL, STATE, AND MANUFACTURER'S RECOMMENDED METHODS FOR SPILL CLEANUP SHALL BE CLEARLY POSTED AND PROCEDURES SHALL BE MADE AVAILABLE TO SITE PERSONNEL.
B. MATERIAL AND EQUIPMENT NECESSARY FOR SPILL CLEANUP SHALL BE KEPT IN THE MATERIAL STORAGE AREAS. TYPICAL MATERIALS AND EQUIPMENT INCLUDES, BUT IS NOT LIMITED TO, BROOMS, DUSTPANS, MOPS, RAGS, GLOVES, GOGGLES, CAT LITTER, SAND, SAWDUST, AND PROPERLY LABELED PLASTIC AND METAL WASTE CONTAINERS.
C. SPILL PREVENTION PRACTICES AND PROCEDURES SHALL BE REVIEWED AFTER A SPILL AND ADJUSTED AS NECESSARY TO PREVENT FUTURE SPILLS.
D. ALL SPILLS WILL BE CLEANED IMMEDIATELY UPON DISCOVERY. ALL SPILLS SHALL BE REPORTED AS REQUIRED BY LOCAL, STATE AND FEDERAL REGULATIONS.
E. THE DISCHARGE OF HAZARDOUS SUBSTANCES OR OIL IN THE STORM WATER DISCHARGE(S) FROM A SITE SHALL BE PREVENTED.
F.

WHERE A RELEASE CONTAINING A HAZARDOUS SUBSTANCE IN AN AMOUNT EQUAL TO OR IN EXCESS OF A REPORTING QUANTITY ESTABLISHED UNDER EITHER GEORGIA'S OIL OR HAZARDOUS MATERIAL SPILLS OR RELEASES ACT (O.C.G.A. SEC. 12-14-2, ET SEQ.), 40 CFR 117, OR 40 CFR 302 OCCURS DURING A 24-HOUR PERIOD, THE PERMITTEE IS REQUIRED TO NOTIFY EPD AT (404) 656-4863 OR (800) 241-4113 AND THE NATIONAL RESPONSE CENTER (NRC) AT (800) 424-8802 IN ACCORDANCE WITH THE REQUIREMENTS OF GEORGIA'S OIL OR HAZARDOUS MATERIAL SPILLS OR RELEASES ACT (O.C.G.A. SEC. 12-14-2, ET SEQ.), 40 CFR 117, AND 40 CFR 302 AS SOON AS HE HAS KNOWLEDGE OF THE DISCHARG

PART III. SPECIAL CONDITIONS, MANAGEMENT PRACTICES, PERMIT VIOLATIONS AND OTHER LIMITATIONS

A. PROHIBITION ON NON-STORMWATER DISCHARGES.

1. EXCEPT AS PROVIDED IN PART I.C.2. AND III.A.2., ALL DISCHARGES COVERED BY THIS PERMIT SHALL BE COMPOSED ENTIRELY OF STORMWATER.
2. THE FOLLOWING NON-STORMWATER DISCHARGES MAY BE AUTHORIZED BY THIS PERMIT PROVIDED NON-STORMWATER COMPONENT OF THE DISCHARGE IS EXPLICITLY LISTED IN THE EROSION AND SEDIMENTATION AND POLLUTION CONTROL PLAN AND IS IN COMPLIANCE WITH PART IV.D.7; DISCHARGES FROM FIRE FIGHTING ACTIVITIES; FIRE HYDRANT FLUSHING; PORTABLE WATER SOURCES INCLUDING WATER LINE FLUSHING; IRRIGATION DRAINAGE; AIR CONDITIONING CONDENSATE; SPRINGS; UNCONTAMINATED GROUND WATER ; AND FOUNDATION OR FOOTING DRAINS WHERE FLOWS ARE NOT CONTAMINATED WITH PROCESS MATERIALS OR POLLUTANTS.
3. THIS PERMIT DOES NOT AUTHORIZE THE DISCHARGE OF SOAPS OR SOLVENTS USED IN VEHICLE AND EQUIPMENT WASHING.
4. THIS PERMIT DOES NOT AUTHORIZE THE DISCHARGE OF WASTEWATER FROM WASHOUT AND CLEANOUT OF STUCCO, PAINT, FORM RELEASE OILS, CURING COMPOUNDS AND OTHER CONSTRUCTION MATERIALS.

B. RELEASES IN EXCESS OF REPORTABLE QUANTITIES

1. THE DISCHARGE OF HAZARDOUS SUBSTANCES OR OIL IN THE STORMWATER DISCHARGE(S) FROM A SITE SHALL BE PREVENTED. THIS PERMIT DOES NOT RELIEVE THE PERMITTEE OF THE REPORTING REQUIREMENTS OF GEORGIA'S OIL OR HAZARDOUS MATERIAL SPILLS OR RELEASES ACT (O.C.G.A. §§12-14-2, ET SEQ.), 40 CFR PART 117 AND 40 CFR PART 302. WHERE A RELEASE CONTAINING A HAZARDOUS SUBSTANCE IN AN AMOUNT EQUAL TO OR IN EXCESS OF A REPORTING QUANTITY ESTABLISHED UNDER EITHER GEORGIA'S OIL OR HAZARDOUS MATERIAL SPILLS OR RELEASES ACT (O.C.G.A. §§12-14-2, ET SEQ.), 40 CFR 117 OR 40 CFR 302 OCCURS DURING A 24 HOUR PERIOD, THE PERMITTEE IS REQUIRED TO NOTIFY EPD AT (404) 6564863OR (800) 241-4113 AND THE NATIONAL RESPONSE CENTER (NRC) AT (800) 424-8802 IN ACCORDANCE WITH THE REQUIREMENTS OF GEORGIA'S OIL OR HAZARDOUS MATERIAL SPILLS OR RELEASES ACT (O.C.G.A. §§12-14-2, ET SEQ.), 40 CFR 117 AND 40 CFR 302 AS SOON AS HE/SHE HAS KNOWLEDGE OF THE DISCHARGE.HE DISCHARGE OF HAZARDOUS SUBSTANCES OR OIL IN THE STORMWATER DISCHARGE(S) FROM A SITE SHALL BE PREVENTED. THIS PERMIT DOES NOT RELIEVE THE PERMITTEE OF THE REPORTING REQUIREMENTS OF GEORGIA'S OIL OR HAZARDOUS MATERIAL SPILLS OR RELEASES ACT (O.C.G.A. §§12-14-2, ET SEQ.), 40 CFR PART 117 AND 40 CFR PART 302. WHERE A RELEASE CONTAINING A HAZARDOUS SUBSTANCE IN AN AMOUNT EQUAL TO OR IN EXCESS OF A REPORTING QUANTITY ESTABLISHED UNDER EITHER GEORGIA'S OIL OR HAZARDOUS MATERIAL SPILLS OR RELEASES ACT (O.C.G.A. §§12-14-2, ET SEQ.), 40 CFR 117 OR 40 CFR 302 OCCURS DURING A 24 HOUR PERIOD, THE PERMITTEE IS REQUIRED TO NOTIFY EPD AT (404) 6564863OR (800) 241-4113 AND THE NATIONAL RESPONSE CENTER (NRC) AT (800) 424-8802 IN ACCORDANCE WITH THE REQUIREMENTS OF GEORGIA'S OIL OR HAZARDOUS MATERIAL SPILLS OR RELEASES ACT (O.C.G.A. §§12-14-2, ET SEQ.), 40 CFR 117 AND 40 CFR 302 AS SOON AS HE/SHE HAS KNOWLEDGE OF THE DISCHARGE.
2. THIS PERMIT DOES NOT AUTHORIZE THE DISCHARGE OF HAZARDOUS SUBSTANCES OR OIL RESULTING FROM AN ON-SITE SPILL.

D. MANAGEMENT PRACTICES AND PERMIT VIOLATIONS.

1. BEST MANAGEMENT PRACTICES, AS SET FORTH IN THIS PERMIT, ARE REQUIRED FOR ALL CONSTRUCTION ACTIVITIES, AND MUST BE IMPLEMENTED IN ACCORDANCE WITH THE DESIGN SPECIFICATIONS CONTAINED IN THE "MANUAL FOR EROSION AND SEDIMENT CONTROL IN GEORGIA" (MANUAL) PUBLISHED BY THE GEORGIA SOIL AND WATER CONSERVATION COMMISSION AS OF JANUARY 1 OF THE YEAR IN WHICH THE LAND-DISTURBING ACTIVITY WAS PERMITTED TO PREVENT OR REDUCE THE POLLUTION OF WATERS OF GEORGIA. PROPER DESIGN, INSTALLATION, AND MAINTENANCE OF BEST MANAGEMENT PRACTICES SHALL CONSTITUTE A COMPLETE DEFENSE TO ANY ACTION BY THE DIRECTOR OR TO ANY OTHER ALLEGATION OF NONCOMPLIANCE WITH PART III.D.4. AND PART III.D.5.

2. EXCEPT AS REQUIRED TO INSTALL THE INITIAL SEDIMENT STORAGE REQUIREMENTS AND PERIMETER CONTROL BMPS AS DESCRIBED IN PART IV.D.3., THE INITIAL SEDIMENT STORAGE REQUIREMENTS AND PERIMETER CONTROL BMPS MUST BE INSTALLED AND IMPLEMENTED PRIOR TO CONDUCTING ANY OTHER CONSTRUCTION ACTIVITIES (E.G., CLEARING, GRUBBING AND GRADING) WITHIN THE CONSTRUCTION SITE OR WHEN APPLICABLE, WITHIN PHASED SUB-PARTS OR SEGMENTS OF THE CONSTRUCTION SITE. FAILURE TO COMPLY SHALL CONSTITUTE A VIOLATION OF THIS PERMIT FOR EACH DAY ON WHICH CONSTRUCTION ACTIVITIES OCCUR. THE DESIGN PROFESSIONAL WHO PREPARED THE PLAN MUST INSPECT THE INITIAL SEDIMENT STORAGE REQUIREMENTS AND PERIMETER CONTROL BMPS IN ACCORDANCE WITH PART IV.A.5. WITHIN SEVEN (7) DAYS AFTER INSTALLATION.

3. FAILURE TO PROPERLY DESIGN, INSTALL, OR MAINTAIN BEST MANAGEMENT PRACTICES SHALL CONSTITUTE A VIOLATION OF THIS PERMIT FOR EACH DAY ON WHICH SUCH FAILURE OCCURS. BMP MAINTENANCE AS A RESULT OF THE PERMITTEE'S ROUTINE INSPECTIONS SHALL NOT BE CONSIDERED A VIOLATION FOR THE PURPOSES OF THIS PARAGRAPH. IF DURING THE COURSE OF THE PERMITTEES ROUTINE INSPECTION BMP FAILURES ARE OBSERVED WHICH HAVE RESULTED IN SEDIMENT DEPOSITION INTO WATERS OF THE STATE, THE PERMITTEE SHALL CORRECT THE BMP FAILURES AND SHALL SUBMIT A SUMMARY OF THE VIOLATIONS TO EPD IN ACCORDANCE WITH PART V.A.2. OF THIS PERMIT.

4. A DISCHARGE OF STORMWATER RUNOFF FROM DISTURBED AREAS WHERE BEST MANAGEMENT PRACTICES HAVE NOT BEEN PROPERLY DESIGNED, INSTALLED, AND MAINTAINED SHALL CONSTITUTE A SEPARATE VIOLATION FOR EACH DAY ON WHICH SUCH DISCHARGE RESULTS IN THE TURBIDITY OF RECEIVING WATER(S) BEING INCREASED BY MORE THAN TEN (10) NEPHELOMETRIC TURBIDITY UNITS FOR WATERS CLASSIFIED AS TROUT STREAMS OR MORE THAN TWENTY-FIVE (25) NEPHELOMETRIC TURBIDITY UNITS FOR WATERS SUPPORTING WARM WATER FISHERIES, REGARDLESS OF A PERMITTEE'S CERTIFICATION UNDER PART II.B.1.I. THIS PARAGRAPH SHALL NOT APPLY TO ANY LAND DISTURBANCE ASSOCIATED WITH THE CONSTRUCTION OF SINGLE-FAMILY HOMES WHICH ARE NOT PART OF A SUBDIVISION OR PLANNED COMMON DEVELOPMENT UNLESS FIVE (5) ACRES OR MORE WILL BE DISTURBED.

5. WHEN THE PERMITTEE HAS ELECTED TO SAMPLE OUTFALL(S), THE DISCHARGE OF STORMWATER RUNOFF FROM DISTURBED AREAS WHERE BEST MANAGEMENT PRACTICES HAVE NOT BEEN PROPERLY DESIGNED, INSTALLED, AND MAINTAINED SHALL CONSTITUTE A SEPARATE VIOLATION FOR EACH DAY ON WHICH SUCH CONDITION RESULTS IN THE TURBIDITY OF THE DISCHARGE EXCEEDING THE VALUE SELECTED FROM APPENDIX B APPLICABLE TO THE CONSTRUCTION SITE. AS SET FORTH THEREIN, THE NEPHELOMETRIC TURBIDITY UNIT (NTU) VALUE SHALL BE SELECTED FROM APPENDIX B BASED UPON THE SIZE OF THE CONSTRUCTION SITE, THE SURFACE WATER DRAINAGE AREA AND WHETHER THE RECEIVING WATER(S) SUPPORTS WARM WATER FISHERIES OR IS A TROUT STREAM AS INDICATED IN THE RULES AND REGULATIONS FOR WATER QUALITY CONTROL, CHAPTER 391-3-6.

6. WHENEVER A PERMITTEE FINDS THAT A BMP HAS FAILED OR IS DEFICIENT (BEYOND ROUTINE MAINTENANCE) AND HAS RESULTED IN SEDIMENT DEPOSITION INTO WATERS OF THE STATE, THE PERMITTEE SHALL IMMEDIATELY TAKE ALL REASONABLE STEPS TO ADDRESS THE CONDITION, INCLUDING CLEANING UP ANY CONTAMINATED SURFACES SO THE MATERIAL WILL NOT DISCHARGE IN SUBSEQUENT STORM EVENTS. THE PERMITTEE SHALL SUBMIT A SUMMARY OF THE VIOLATIONS TO EPD IN ACCORDANCE WITH PART V.A.2. OF THIS PERMIT AND SHALL CORRECT SUCH BMP AS FOLLOWS:

D. WHEN THE REPAIR DOES NOT REQUIRE A NEW OR REPLACEMENT BMP OR SIGNIFICANT REPAIR, THE BMP FAILURE OR DEFICIENCY MUST BE REPAIRED WITHIN TWO (2) BUSINESS DAYS FROM THE TIME OF DISCOVERY;

E. WHEN THE REPAIR REQUIRES A NEW OR REPLACEMENT BMP OR SIGNIFICANT REPAIR, THE INSTALLATION OF THE NEW OR MODIFIED BMP MUST BE COMPLETED AND THE BMP MUST BE OPERATIONAL BY NO LATER THAN SEVEN (7) DAYS FROM THE TIME OF DISCOVERY. IF IT IS INFEASIBLE TO COMPLETE THE INSTALLATION OR REPAIR WITHIN SEVEN (7) DAYS, THE PERMITTEE MUST DOCUMENT WHY IT IS INFEASIBLE TO COMPLETE THE INSTALLATION OR REPAIR WITHIN THE SEVEN (7) DAY TIMEFRAME AND DOCUMENT THE SCHEDULE FOR INSTALLING OR REPAIRING THE BMPS AND MAKING THE BMPS OPERATIONAL AS SOON AS FEASIBLE AFTER THE SEVEN (7) DAY TIMEFRAME.

DESIGN PROFESSIONAL:
BRAD JONES, PLA.
LEVEL II CERTIFICATION
No.: 000031792

PERMIT SET

SANDY SPRINGS GEORGIA

GEORGIA REGISTERED No. 1339 LANDSCAPE ARCHITECT ROBERT BRADLEY JONES
GSWCC: #31792
10/21/2019 SEAL

MARK	DESCRIPTION	DATE	APPR.
0	BID SET	2019.10.16	

DESIGNED BY: PBT | DATE: OCTOBER 16, 2019
DWN BY: PBT | CKD BY: RBJ | SOLICITATION NO.: -
SUBMITTED BY: PBT | CONTRACT NO.: -
FILE NAME: C2001.dwg | FILE NUMBER: -
SIZE: 22" x 34" | IN/OT SCALE: 1:1 | PLOT DATE: 10/21/2019

CITY OF SANDY SPRINGS
1 GALAMBOS WAY
SANDY SPRINGS, GA 30328

POND
3500 Parkway Lane
Peachtree Corners, GA
30092 USA
Phone 678.336.7740
Fax 678.336.7744
POND PROJECT No.119007.00

HERITAGE PARK IMPROVEMENTS

EROSION CONTROL NOTES

SHEET IDENTIFICATION NUMBER
CE003

FILE PATH: \\ACP3SERVER\RESOURCES\PROJECTS\FY19\119070804.CAD_BIM\04.02.CAD\CE001.DWG PLOTTED BY: JONES, BRAD

NON-EXEMPT ACTIVITIES SHALL NOT BE CONDUCTED WITHIN THE 25- OR 50-FOOT UNDISTURBED STREAM BUFFERS AS MEASURED FROM THE POINT OF WRESTED VEGETATION WITHOUT FIRST ACQUIRING THE NECESSARY VARIANCES AND PERMITS.

ADMENDMENTS/REVISIONS TO THE ES&PC PLAN WHICH HAVE A SIGNIFICANT EFFECT ON BMPS WITH A HYDRAULIC COMPONENT MUST BE CERTIFIED BY THE DESIGN PROFESSIONAL. REVISIONS OR AMENDMENTS SHOULD E SUBMITTED TO THE LOCAL ISSUING AUTHORITY FOR REVIEW.

WASTE MATERIALS SHALL NOT BE DISCHARGED TO WATERS OF THE STATE, EXCEPT AS AUTHORIZED BY A SECTION 404 PERMIT.

THE ESCAPE OF SEDIMENT FROM THE SITE SHALL BE PREVENTED BY THE INSTALLATION OF EROSION AND SEDIMENT CONTROL MEASURES AND PRACTICES PRIOR TO, OR CONCURRENT WITH, LAND DISTURBING ACTIVITIES.

EROSION CONTROL MEASURES WILL BE MAINTAINED AT ALL TIMES. IF FULL IMPLEMENTATION OF THE APPROVED PLAN DOES NOT PROVIDE FOR EFFECTIVE EROSION CONTROL, ADDITIONAL EROSION AND SEDIMENT CONTROL MEASURES SHALL BE IMPLEMENTED TO CONTROL OR TREAT THE SEDIMENT SOURCE.

ANY DISTURBED AREA LEFT EXPOSED FOR A PERIOD GREATER THAN 14 DAYS SHALL BE STABILIZED WITH MULCH OR TEMPORARY SEEDING.

ALL BUFFERS AND TREE SAVE AREAS SHALL BE CLEARLY IDENTIFIED WITH FLAGGING AND/OR FENCING PRIOR TO COMMENCEMENT OF ANY LAND DISTURBANCE.

SEDIMENT STORAGE MAINTENANCE INDICATORS MUST BE INSTALLED IN SEDIMENT STORAGE STRUCTURES, INDICATING THE 1/3 FULL VOLUME.

THIS PROJECT DOES NOT ALLOW FOR THE CONCRETE WASHDOWN OF TOOLS, CONCRETE MIXER CHUTES, HOPPERS, OR THE REAR OF VEHICLES. WASHOUT OF THE DRUM AT THE CONSTRUCTION SITE IS PROHIBITED.

LOCATION OF BEST MANAGEMENT PRACTICES THAT ARE CONSISTENT WITH, AND NO LESS STRINGENT THAN THE MANUAL FOR EROSION AND SEDIMENT CONTROL IN GEORGIA. USE UNIFORM CODING SYMBOLS FROM THE MANUAL, CHAPTER 6, WITH LEGEND.

DESIGN PROFESSIONAL'S CERTIFICATION:

1. I CERTIFY THAT THE PERMITEE'S EROSION, SEDIMENTATION, AND POLLUTION CONTROL PLAN PROVIDES FOR AN APPROPRIATE AND COMPREHENSIVE SYSTEM OF BEST MANAGEMENT PRACTICES REQUIRED BY THE GEORGIA WATER QUALITY CONTROL ACT AND THE DOCUMENT "MANUAL FOR EROSION AND SEDIMENT CONTROL IN GEORGIA" (MANUAL) PUBLISHED BY THE STATE SOIL AND WATER CONSERVATION COMMISSION AS OF JANUARY 1 OF THE YEAR IN WHICH THE LAND-DISTURBING ACTIVITY WAS PERMITTED, PROVIDES FOR THE SAMPLING OF THE RECEIVING WATER(S) OR THE SAMPLING OF THE STORM WATER OUTFALLS AND THAT THE DESIGNED SYSTEM OF BEST MANAGEMENT PRACTICES AND SAMPLING METHODS IS EXPECTED TO MEET THE REQUIREMENTS CONTAINED IN THE GENERAL NPDES PERMIT NO. GAR 100001.

2. I CERTIFY UNDER PENALTY OF LAW THAT THIS PLAN WAS PREPARED AFTER A SITE VISIT TO THE LOCATIONS DESCRIBED HEREIN BY MYSELF OR MY AUTHORIZED AGENT, UNDER MY SUPERVISION.

3. I CERTIFY UNDER PENALTY OF LAW THAT THIS DOCUMENT AND ALL ATTACHMENTS WERE PREPARED UNDER MY DIRECTION OR SUPERVISION IN ACCORDANCE WITH A SYSTEM DESIGNED TO ASSURE THAT CERTIFIED PERSONNEL PROPERLY GATHER AND EVALUATE THE INFORMATION SUBMITTED. BASED ON MY INQUIRY OF THE PERSON OR PERSONS WHO MANAGE THE SYSTEM, OR THOSE PERSONS DIRECTLY RESPONSIBLE FOR GATHERING THE INFORMATION, THE INFORMATION SUBMITTED IS, TO THE BEST OF MY KNOWLEDGE AND BELIEF, TRUE, ACCURATE, AND COMPLETE. I AM AWARE THAT THERE ARE SIGNIFICANT PENALTIES FOR SUBMITTING FALSE INFORMATION, INCLUDING THE POSSIBILITY OF FINE AND IMPRISONMENT FOR KNOWING VIOLATIONS.

10/21/2019

BRAD JONES
LEVEL II CERTIFICATION NO: 000031792 DATE

THE PRIMARY PERMITTEE MUST RETAIN THE DESIGN PROFESSIONAL WHO PREPARED THE EROSION, SEDIMENTATION AND POLLUTION CONTROL PLAN, EXCEPT WHEN THE PRIMARY PERMITTEE HAS REQUESTED IN WRITING AND EPD HAS AGREED TO AN ALTERNATE DESIGN PROFESSIONAL, TO INSPECT THE INSTALLATION OF THE INITIAL SEDIMENT STORAGE REQUIREMENTS AND PERIMETER CONTROL BMPS WHICH THE DESIGN PROFESSIONAL DESIGNED WITHIN SEVEN (7) DAYS AFTER INSTALLATION. THE DESIGN PROFESSIONAL SHALL DETERMINE IF THESE BMPS HAVE BEEN INSTALLED AND ARE BEING MAINTAINED AS DESIGNED. THE DESIGN PROFESSIONAL SHALL REPORT THE RESULTS OF THE INSPECTION TO THE PRIMARY PERMITTEE WITHIN SEVEN (7) DAYS AND THE PERMITTEE MUST CORRECT ALL DEFICIENCIES WITHIN TWO (2) BUSINESS DAYS OF RECEIPT OF THE INSPECTION REPORT FROM THE DESIGN PROFESSIONAL UNLESS WEATHER RELATED SITE CONDITIONS ARE SUCH THAT ADDITIONAL TIME IS REQUIRED.

DESIGN PROFESSIONAL 7-DAY VISIT CERTIFICATION

DATE OF INSPECTION _____

I certify the site was in compliance with the ESPCP Plan on the date of inspection.

_____

GSWCC LEVEL II DESIGN PROFESSIONAL CERTIFICATION #

Inspection revealed the following discrepancies from the ESPCP Plan.

_____

_____

_____

These deficiencies must be addressed immediately and a re-inspection scheduled. Work shall not proceed on the site until Design Professional Certification is obtained.

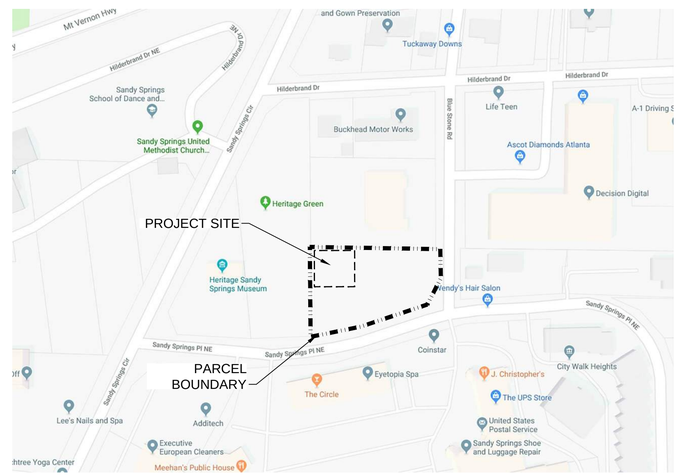

B2 VICINITY MAP

SCALE: N.T.S.

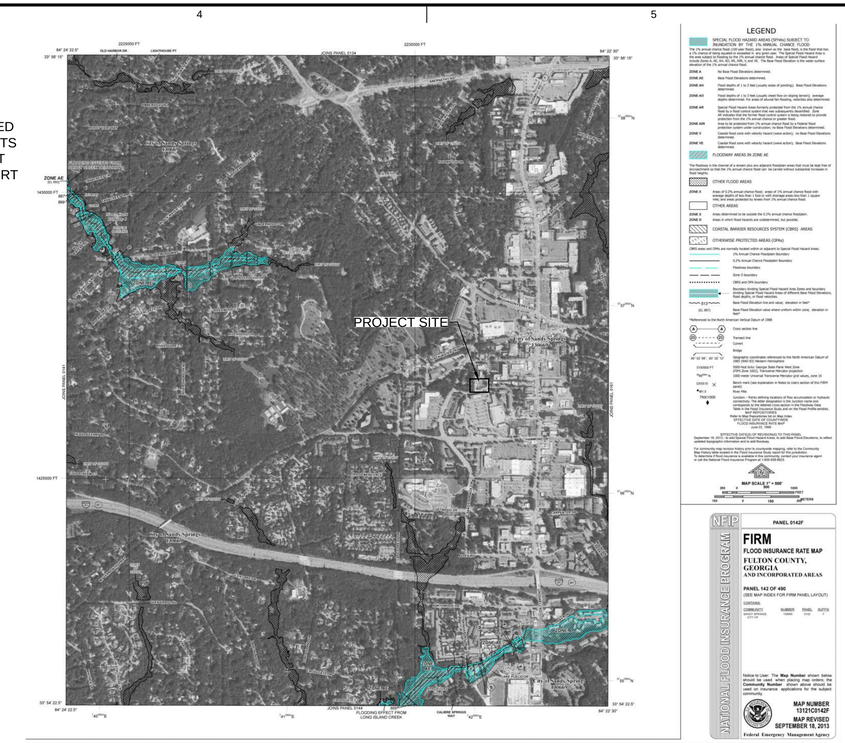

C4 FEMA FLOOD MAP - 13121C0142 F EFFECTIVE DATE 09/18/13

SCALE: N.T.S.

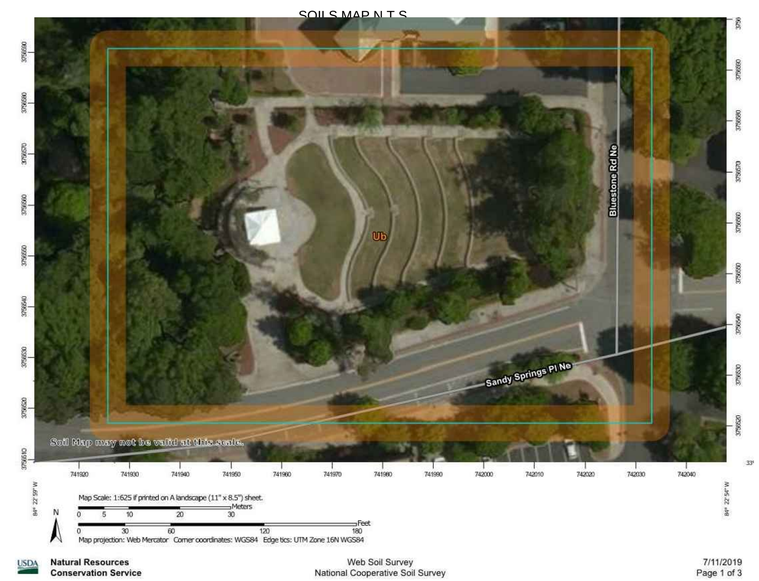

SOILS LEGEND	
SYMBOL	DESCRIPTION
Ub	Urban Land - 100%

ACTIVITY SCHEDULE

STARTING AND COMPLETION DATES TO BE DETERMINED

ACTIVITY	TIME / MONTHS								
	1	2	3	4	5	6	7	8	9
INSTALL PERIMETER AND STORAGE BMP'S	■								
EROSION CONTROL DEVICES	■	■	■	■	■	■	■	■	■
CLEARING AND GRUBBING		■	■						
DEMOLITION		■							
ROUGH GRADING OPERATIONS			■	■					
INFRASTRUCTURE CONSTRUCTION (UTILITIES)				■	■	■			
CONSTRUCTION OF RESTROOM & SITE WORK						■	■	■	
FINAL PAVING									■
PERMANENT VEGETATION									■
REMOVAL OF TEMPORARY EROSION AND SEDIMENT CONTROL MEASURES									■
MAINTENANCE OF TEMPORARY EROSION AND SEDIMENT CONTROL MEASURES	■	■	■	■	■	■	■	■	■

DESIGN PROFESSIONAL:
BRAD JONES, PL.A.
LEVEL II CERTIFICATION
No.: 000031792

PERMIT SET

SANDY SPRINGS GEORGIA

GEORGIA REGISTERED No. 3339 LANDSCAPE ARCHITECT ROBERT BRADLEY JONES

GSWCC: #31792
10/21/2019 SEAL

MARK	DESCRIPTION	DATE	APPR.
0	BID SET	2019.10.16	

DATE: OCTOBER 16, 2019
SOLICITATION NO.: -
CONTRACT NO.: -
FILE NUMBER: -
PLOT DATE: 10/21/2019
PLOT SCALE: 1:1

DESIGNED BY: PBT
DWN BY: PBT
CKD BY: RBJ
SUBMITTED BY: PBT
FILE NAME: CE001.dwg
SIZE: 22" x 34"

CITY OF SANDY SPRINGS
1 GALAMBOS WAY
SANDY SPRINGS, GA 30328

POND
3500 Parkway Lane
Peachtree Corners, GA
Suite 550 30092
Phone 678.336.7740
Fax 678.336.7744
POND PROJECT No. 11910708

HERITAGE PARK IMPROVEMENTS

EROSION CONTROL NOTES

SHEET IDENTIFICATION NUMBER
CE004

FILE PATH: \\ACP3SERVER\RESOURCES\PROJECTS\FY19\11910708\04.CAD_BIM\04.02.CAD\CE001.DWG PLOTTED BY: JONES, BRAD

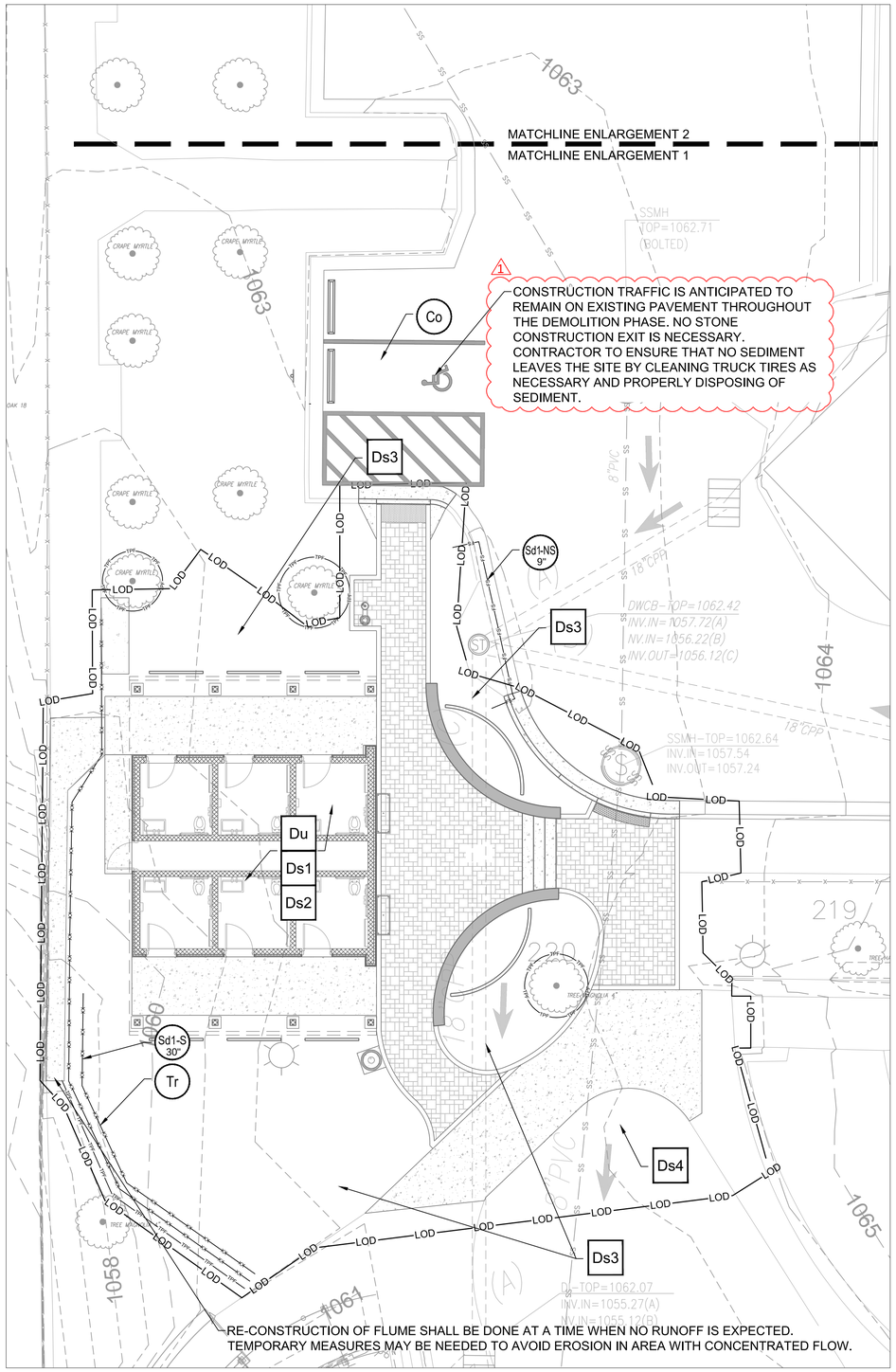

B1 ENLARGEMENT 1
SCALE: 1/8" = 1'-0"

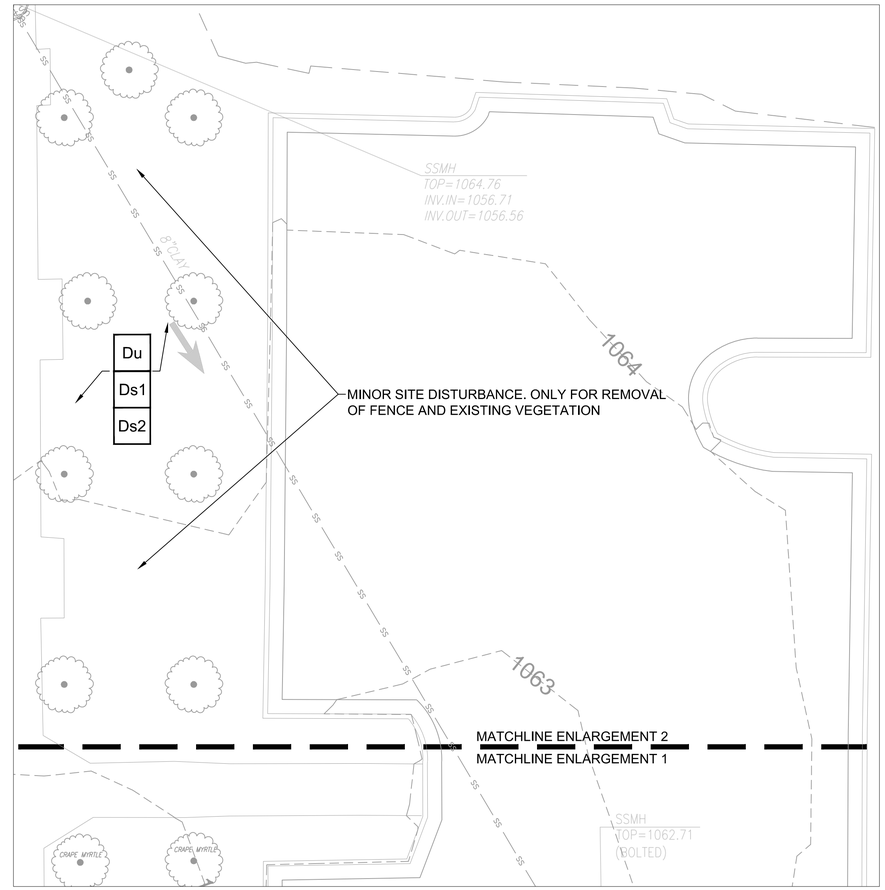

B3 ENLARGEMENT 2
SCALE: 1/8" = 1'-0"

KEY MAP

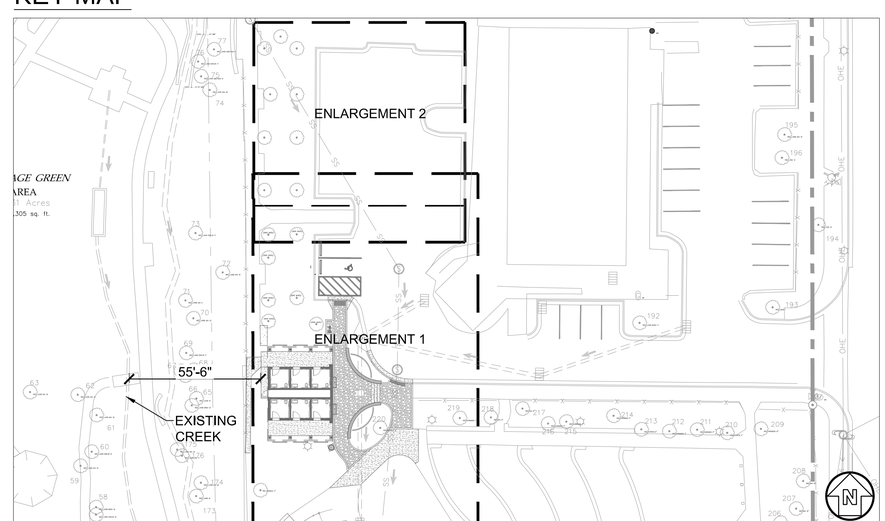

SCALE: N.T.S.

GENERAL SHEET NOTES

1. REFER TO SHEET C-001 FOR GENERAL CIVIL NOTES AND LEGEND.
2. THIS SHEET IS PART OF A MULTI-SHEET SET OF CONSTRUCTION PLANS AND SHALL BE READ WITH THE FULL SET TO BEST ENSURE PROPER INTERPRETATION.
3. NON-EXEMPT ACTIVITIES SHALL BE CONDUCTED WITHIN THE 25 OR 50-FOOT UNDISTURBED STREAM BUFFERS AS MEASURED FROM THE POINT OF WRESTED VEGETATION WITHOUT FIRST ACQUIRING THE NECESSARY VARIANCES AND PERMITS.
4. THE ESCAPE OF SEDIMENT FROM THE SITE SHALL BE PREVENTED BY THE INSTALLATION OF EROSION AND SEDIMENT CONTROL MEASURES AND PRACTICES PRIOR TO, OR CONCURRENT WITH, LAND DISTURBING ACTIVITIES.
5. EROSION CONTROL MEASURES WILL BE MAINTAINED AT ALL TIMES. IF FULL IMPLEMENTATION OF THE APPROVED PLAN DOES NOT PROVIDE FOR EFFECTIVE EROSION CONTROL, ADDITIONAL EROSION AND SEDIMENT CONTROL MEASURES SHALL BE IMPLEMENTED TO CONTROL OR TREAT THE SEDIMENT SOURCE.
6. ANY DISTURBED AREA LEFT EXPOSED FOR A PERIOD GREATER THAN 14 DAYS SHALL BE STABILIZED WITH MULCH OR TEMPORARY SEEDING.
7. PRIOR TO ANY OTHER CONSTRUCTION, A STABILIZED CONSTRUCTION ENTRANCE SHALL BE CONSTRUCTED AT EACH ENTRY TO OR EXIT FROM THE SITE.
8. THE CONSTRUCTION EXITS SHALL BE MAINTAINED IN A CONDITION WHICH WILL PREVENT TRACKING OR FLOW OF MUD ONTO PUBLIC RIGHT-OF-WAY. THIS MAY REQUIRE PERIODIC TOP DRESSING WITH STONE, AS CONDITIONS DEMANDS, AND REPAIR AND/OR CLEAN-OUT OF ANY STRUCTURES USED TO TRAP SEDIMENT. ALL MATERIALS SPILLED, DROPPED, WASHED, OR TRACKED FROM VEHICLE ONTO PUBLIC ROADWAY OR INTO STORM DRAIN MUST BE REMOVED.
9. PRIOR TO COMMENCING LAND DISTURBANCE ACTIVITY, THE LIMITS OF LAND DISTURBANCE SHALL BE CLEARLY AND ACCURATELY DEMARCATED WITH STAKES, RIBBONS, OR OTHER APPROPRIATE MEANS. THE LOCATION AND EXTENT OF ALL AUTHORIZED LAND DISTURBANCE SHALL OCCUR WITHIN THE APPROVED LIMITS INDICATED ON THE APPROVED PLANS.
10. IMMEDIATELY AFTER THE ESTABLISHMENT OF CONSTRUCTION ENTRANCES/EXITS, ALL PERIMETER EROSION CONTROL DEVICES AND STORMWATER MANAGEMENT DEVICES SHALL BE INSTALLED PRIOR TO ANY OTHER CONSTRUCTION.
11. OWNER AGREES TO PROVIDE AND MAINTAIN OFF-STREET PARKING ON THE SUBJECT PROPERTY DURING THE ENTIRE CONSTRUCTION PERIOD.
12. NRCS WEB SOIL SURVEY IDENTIFIES SOIL SERIES AS 100% Ub / URBAN LAND.

SHEET LEGEND

Co	CONCRETE WASHDOWN AREA (CONSTRUCTION EXIT) -DETAIL B1/CE503
Sd1-S 30"	TYPE C SILT FENCE- -DETAIL A3/CE502
Tr	TREE PROTECTION -DETAIL A1/CE503
Sd1-NS 9"	COMPOST FILTER SOCK -DETAIL C1/CE504
Du	DUST CONTROL - DETAIL C3/CE503
Ds1	DISTURBED AREAS STABILIZED WITH MULCHING ONLY - DETAIL C1/CE501
Ds2	DISTURBED AREAS STABILIZED WITH TEMPORARY SEEDING - DETAIL A1/CE501
Ds3	DISTURBED AREAS STABILIZED WITH PERMANENT VEGETATION - DETAIL A3/CE501
Ds4	DISTURBED AREAS STABILIZED WITH SODDING - DETAIL A1/CE502

PERMIT SET

SANDY SPRINGS GEORGIA

GEORGIA REGISTERED No. 1339 LANDSCAPE ARCHITECT ROBERT BRADLEY JONES
GSWCC: #31792
10/21/2019 SEAL

MARK	DESCRIPTION	DATE	APPR.
0	BID SET	2019.10.16	

DESIGNED BY: PBT
DWN BY: PBT
CKD BY: RBJ
SUBMITTED BY: PBT
FILE NAME: CE101.dwg
PLOT SCALE: 22" x 34" 1:1
DATE: OCTOBER 16, 2019
SOLICITATION NO.: -
CONTRACT NO.: -
FILE NUMBER: -
PLOT DATE: 10/21/2019

CITY OF SANDY SPRINGS
1 GALAMBOS WAY
SANDY SPRINGS, GA 30328

POND
3500 Parkway Lane
Peachtree Corners, GA 30092-2688
Phone 678.336.7740
Fax 678.336.7744
POND PROJECT No. 1190708

HERITAGE PARK IMPROVEMENTS

EROSION CONTROL PLAN

SHEET IDENTIFICATION NUMBER
CE101

FILE PATH: X:\FY19\1190708\04.CAD_BIM\04.02.CAD\CE101.DWG PLOTTED BY: JONES, BRAD

COMPLIANCE

MULCH OR TEMPORARY GRASSING SHALL BE APPLIED TO ALL EXPOSED AREAS WITHIN 14 DAYS OF DISTURBANCE. MULCH CAN BE USED AS A SINGULAR EROSION CONTROL DEVICE FOR UP TO SIX MONTHS, BUT IT SHALL BE APPLIED AT THE APPROPRIATE DEPTH, DEPENDING ON THE MATERIAL USED, ANCHORED, AND HAVE A CONTINUOUS 90% COVER OR GREATER OF THE SOIL SURFACE. MAINTENANCE SHALL BE REQUIRED TO MAINTAIN APPROPRIATE DEPTH AND 90% COVER. TEMPORARY VEGETATION MAY BE EMPLOYED INSTEAD OF MULCH IF THE AREA WILL REMAIN UNDISTURBED FOR LESS THAN SIX MONTHS. IF ANY AREA WILL REMAIN UNDISTURBED FOR GREATER THAN SIX MONTHS, PERMANENT VEGETATIVE TECHNIQUES SHALL BE EMPLOYED. REFER TO DS2 -DISTURBED AREA STABILIZATION (WITH TEMPORARY SEEDING), DS3 - DISTURBED AREA STABILIZATION (WITH PERMANENT SEEDING), AND DS4 - DISTURBED AREA STABILIZATION (WITH SODDING).

MULCHING WITHOUT SEEDING

THIS STANDARD APPLIES TO GRADED OR CLEARED AREAS WHERE SEEDINGS MAY NOT HAVE A SUITABLE GROWING SEASON TO PRODUCE AN EROSION RETARDANT COVER, BUT CAN BE STABILIZED WITH A MULCH COVER.

SITE PREPARATION

1. GRADE TO PERMIT THE USE OF EQUIPMENT FOR APPLYING AND ANCHORING MULCH.
2. INSTALL NEEDED EROSION CONTROL MEASURES AS REQUIRED SUCH AS DIKES, DIVERSIONS, BERMS, TERRACES AND SEDIMENT BARRIERS.
3. LOOSEN COMPACT SOIL TO A MINIMUM DEPTH OF 3 INCHES.

MULCHING MATERIALS

SELECT ONE OF THE FOLLOWING MATERIALS AND APPLY AT THE DEPTH INDICATED:

1. DRY STRAW OR HAY SHALL BE APPLIED AT A DEPTH OF 2 TO 4 INCHES PROVIDING COMPLETE SOIL COVER-AGE. ONE ADVANTAGE OF THIS MATERIAL IS EASY APPLICATION.
2. WOOD WASTE (CHIPS, SAWDUST OR BARK) SHALL BE APPLIED AT A DEPTH OF 2 TO 3 INCHES. ORGANIC MATERIAL FROM THE CLEARING STAGE OF DEVELOPMENT SHOULD REMAIN ON SITE, BE CHIPPED, AND APPLIED AS MULCH. THIS METHOD OF MULCHING CAN GREATLY REDUCE EROSION CONTROL COSTS.
3. POLYETHYLENE FILM SHALL BE SECURED OVER BANKS OR STOCKPILED SOIL MATERIAL FOR TEMPORARY PROTECTION. THIS MATERIAL CAN BE SALVAGED AND RE-USED.

APPLYING MULCH

WHEN MULCH IS USED WITHOUT SEEDING, MULCH SHALL BE APPLIED TO PROVIDE FULL COVERAGE OF THE EXPOSED AREA.

1. DRY STRAW OR HAY MULCH AND WOOD CHIPS SHALL BE APPLIED UNIFORMLY BY HAND OR BY MECHANICAL EQUIPMENT.
2. IF THE AREA WILL EVENTUALLY BE COVERED WITH PERENNIAL VEGETATION, 20-30 POUNDS OF NITROGEN PER ACRE IN ADDITION TO THE NORMAL AMOUNT SHALL BE APPLIED TO OFFSET THE UPTAKE OF NITROGEN CAUSED BY THE DECOMPOSITION OF THE ORGANIC MULCHES.
3. APPLY POLYETHYLENE FLM ON EXPOSED AREAS.

ANCHORING MULCH

1. STRAW OR HAY MULCH CAN BE PRESSED INTO THE SOIL WITH A DISK HARROW WITH THE DISK SET STRAIGHT OR WITH A SPECIAL "PACKER DISK." DISKS MAY BE SMOOTH OR SERRATED AND SHOULD BE 20 INCHES OR MORE IN DIAMETER AND 8 TO 12 INCHES APART. THE EDGES OF THE DISK SHOULD BE DULL ENOUGH NOT TO CUT THE MULCH BUT TO PRESS IT INTO THE SOIL LEAVING MUCH OF IT IN AN ERECT POSITION. STRAW OR HAY MULCH SHALL BE ANCHORED IMMEDIATELY AFTER APPLICATION.

   STRAW OR HAY MULCH SPREAD WITH SPECIAL BLOWER-TYPE EQUIPMENT MAY BE ANCHORED. TACKIFERS, BINDERS AND HYDRAULIC MULCH WITH TACKIFER SPECIFCALLY DESIGNED FOR TACKING STRAW CAN BE SUBSTITUTED FOR EMULSIFIED ASPHALT. PLEASE REFER TO SPECIFCATION TAC-TACKIFERS. PLASTIC MESH OR NETTING WITH MESH NO LARGER THAN ONE INCH BY ONE INCH SHALL BE INSTALLED ACCORDING TO MANUFACTURER'S SPECI-FCATIONS.

2. NETTING OF THE APPROPRIATE SIZE SHALL BE USED TO ANCHOR WOOD WASTE. OPENINGS OF THE NETTING SHALL NOT BE LARGER THAN THE AVERAGE SIZE OF THE WOOD WASTE CHIPS.

3. POLYETHYLENE FILM SHALL BE ANCHOR TRENCHED AT THE TOP AS WELL AS INCREMENTALLY AS NECESSARY.

C1 DISTURBED AREAS STABILIZATION WITH MULCHING ONLY

SCALE: N.T.S.

Ds1

SPECIES	BROADCAST RATES 2/ - PLS 3/ PER ACRE	BROADCAST RATES 2/ - PLS 3/ PER 1000 SQ. FT.	RESOURCE AREA	PLANTING RATES BY RESOURCE AREA PLANTING DATES (▬ OPTIMUM, — PERMISSIBLE BUT MARGINAL) J F M A M J J A S O N D	REMARKS
MILLET, PEARL (PENNESETUM GLAUCUM) ALONE	50 LBS	1.1 LB	M-L P C		88,000 SEED PER POUND. QUICK DENSE COVER. MAY REACH 5 FEET IN HEIGHT. NOT RECOMMENDED FOR MIXTURES.
RYEGRESS, ANNUAL (LOLIUM TEMULENTUM)	40 LBS	0.9 LB	M-L P C		227,000 SEED PER POUND. DENSE COVER. VERY COMPETITIVE VERY COMPETITIVE AND IS NOT TO BE USED IN MIXTURES. PARTIALLY SHADED SITES
SUDANGRASS (SORGHUM SUDANESE)	60 LBS	1.4 LB	M-L P C		55,000 SEED PER POUND. GOOD ON DROUGHTY SITES. NOT RECOMMENDED FOR MIXTURES.
MILLET, BROWNTOP (PANICUM FASCICULATUM) IN MIXTURES	40 LBS 10 LBS	0.9 LB 0.2 LB	M-L P C		137,000 SEED PER POUND. QUICK DENSE COVER. WILL PROVIDE TOO MUCH COMPETITION IN MIXTURES IF SEEDED AT HIGH RATES.

SPECIFICATIONS

GRADING AND SHAPING

- EXCESSIVE WATER RUN-OFF SHALL BE REDUCED BY PROPERLY DESIGNED AND INSTALLED EROSION CONTROL PRACTICES SUCH AS CLOSED DRAINS, DITCHES, DIKES, DIVERSIONS, SEDIMENT BARRIERS AND OTHERS. NO SHAPING OR GRADING IS REQUIRED IF SLOPES CAN BE STABILIZED BY HAND-SEEDED VEGETATION OR IF HYDRAULIC SEEDING EQUIPMENT IS TO BE USED.

SEEDBED PREPARATION

- WHEN A HYDRAULIC SEEDER IS USED, SEEDBED PREPARATION IS NOT REQUIRED. WHEN USING CONVENTIONAL OR HAND-SEEDING, SEEDBED PREPARATION IS NOT REQUIRED IF THE SOIL MATERIAL IS LOOSE AND NOT SEALED BY RAINFALL.
- WHEN SOIL HAS BEEN SEALED BY RAINFALL OR CONSISTS OF SMOOTH CUT SLOPES, THE SOIL SHALL BE PITTED, TRENCHED OR OTHERWISE SCARIFED TO PROVIDE A PLACE FOR SEED TO LODGE AND GERMINATE.

LIME AND FERTILIZER

- AGRICULTURAL LIME IS REQUIRED UNLESS SOIL TESTS INDICATE OTHERWISE. APPLY AGRICULTURAL LIME AT A RATE DETERMINED BY SOIL TEST FOR PH. QUICK ACTING LIME SHOULD BE INCORPORATED TO MODIFY PH DURING THE GERMINATION PERIOD. BIO STIMULANTS SHOULD ALSO BE CONSIDERED WHEN THERE IS LESS THAN 3% ORGANIC MATTER IN THE SOIL. GRADED AREAS REQUIRE LIME APPLICATION. SOILS MUST BE TESTED TO DETERMINE REQUIRED AMOUNTS OF FERTILIZER AND AMENDMENTS. FERTILIZER SHOULD BE APPLIED BEFORE LAND PREPARATION AND INCORPORATED WITH A DISK, RIPPER, OR CHISEL. ON SLOPES TOO STEEP FOR, OR INACCESSIBLE TO EQUIPMENT, FERTILIZER SHALL BE HYDRAULICALLY APPLIED, PREFERABLY IN THE FRST PASS WITH SEED AND SOME HYDRAULIC MULCH, THEN TOPPED WITH THE REMAINING REQUIRED APPLICATION RATE.

SEEDING

- SELECT A GRASS OR GRASS-LEGUME MIXTURE SUIT-ABLE TO THE AREA AND SEASON OF THE YEAR. SEED SHALL BE APPLIED UNIFORMLY BY HAND, CYCLONE SEEDER, DRILL, CULTI-PACKER-SEEDER, OR HYDRAULIC SEEDER (SLURRY INCLUDING SEED AND FERTILIZER). DRILL OR CULTIPACKER SEEDERS SHOULD NORMALLY PLACE SEED ONE-QUARTER TO ONE-HALF INCH DEEP. APPROPRIATE DEPTH OF PLANTING IS TEN TIMES THE SEED DIAMETER. SOIL SHOULD BE "RAKED" LIGHTLY TO COVER SEED WITH SOIL IF SEEDED BY HAND.

MULCHING

- TEMPORARY VEGETATION CAN, IN MOST CASES, BE ESTABLISHED WITHOUT THE USE OF MULCH, PROVIDED THERE IS LITTLE TO NO EROSION POTENTIAL. HOWEVER, THE USE OF MULCH CAN OFTEN ACCELERATE AND ENHANCE GERMINATION AND VEGETATION ESTABLISHMENT. MULCH WITHOUT SEEDING SHOULD BE CONSIDERED FOR SHORT TERM PROTECTION. REFER TO DS1 - DISTURBED AREA STABILIZATION (WITH MULCHING ONLY).

IRRIGATION

- DURING TIMES OF DROUGHT, WATER SHALL BE APPLIED AT A RATE NOT CAUSING RUNOFF AND EROSION. THE SOIL SHALL BE THOROUGHLY WETTED TO A DEPTH THAT WILL INSURE GERMINATION OF THE SEED. SUBSEQUENT APPLICATIONS SHOULD BE MADE WHEN NEEDED.

A1 DISTURBED AREAS STABILIZATION WITH TEMPORARY SEEDING

SCALE: N.T.S.

Ds2

DEFINITION

THE PLANTING OF PERENNIAL VEGETATION SUCH AS TREES, SHRUBS, VINES, GRASSES OR LEGUMES ON EXPOSED AREAS FOR FINAL PERMANENT STABILIZATION. PERMANENT PERENNIAL VEGETATION SHALL BE USED TO ACHIEVE FINAL STABILIZATION.

CONDITIONS

PERMANENT PERENNIAL VEGETATION IS USED TO PROVIDE A PROTECTIVE COVER FOR EXPOSED AREAS INCLUDING CUTS, FILLS, DAMS, AND OTHER DENUDED AREAS.

SPECIFICATIONS

A. GRADING & SHAPING

- GRADING AND SHAPING IS NOT NORMALLY REQUIRED WHERE HYDRAULIC SEEDING AND FERTILIZING EQUIPMENT IS TO BE USED. VERTICAL BANKS SHALL BE SLOPED TO ENABLE PLANT ESTABLISHMENT.
- WHEN CONVENTIONAL SEEDING AND FERTILIZING ARE TO BE DONE, GRADE AND SHAPE WHERE FEASIBLE AND PRACTICAL, SO THAT EQUIPMENT CAN BE USED SAFELY AND EFFICIENTLY DURING SEEDBED PREPARATION, SEEDING, MULCHING, AND MAINTENANCE OF THE VEGETATION.
- CONCENTRATIONS OF WATER THAT WILL CAUSE EXCESSIVE SOIL EROSION SHALL BE DIVERTED TO A SAFE OUTLET. DIVERSIONS AND OTHER TREATMENT PRACTICES SHALL CONFORM WITH THE APPROPRIATE STANDARDS AND SPECIFICATIONS.

B. SEEDBED PREPARATION

- SEEDBED PREPARATION MAY NOT BE REQUIRED WHERE HYDRAULIC SEEDING AND FERTILIZING EQUIPMENT IS TO BE USED.
- WHEN CONVENTIONAL SEEDING IS TO BE USED, SEEDBED PREPARATION WILL BE DONE AS FOLLOWS:

BROADCAST PLANTING

1. TILLAGE AT A MINIMUM, SHALL ADEQUATELY LOOSEN THE SOIL TO A DEPTH OF 4 TO 6 INCHES; ALLEVIATE COMPACTION; INCORPORATE LIME AND FERTILIZER; SMOOTH AND FIRM THE SOIL; ALLOW FOR THE PROPER PLACEMENT OF SEED SPRIGS, OR PLANTS; AND ALLOW FOR THE ANCHORING OF STRAW OR HAY. MULCH IF A DISK IS TO BE USED.
2. TILLAGE MAY BE DONE WITH ANY SUITABLE EQUIPMENT.
3. TILLAGE SHOULD BE DONE ON THE CONTOUR WHERE FEASIBLE.
4. ON SLOPES TOO STEEP FOR THE SAFE OPERATION OF TILLAGE EQUIPMENT, THE SOIL SURFACE SHALL BE PITTED OR TRENCHED ACROSS THE SLOPE WITH APPROPRIATE HAND TOOLS TO PROVIDE TWO PLACES 6 TO 8 INCHES APART IN WHICH SEED MAY LODGE AND GERMINATE. HYDRAULIC SEEDING MAY ALSO BE USED.

C. INDIVIDUAL PLANTS

- WHERE INDIVIDUAL PLANTS ARE TO BE SET, THE SOIL SHALL BE PREPARED BY EXCAVATING HOLES, OPENING FURROWS, OR DIBBLE PLANTING.
- FUR NURSERY STOCK PLANTS, HOLES SHALL BE LARGE ENOUGH TO ACCOMMODATE ROOTS WITHOUT CROWDING.
- WHERE PINE SEEDLINGS ARE TO BE PLANTED, SUBSOIL UNDER THE ROW 36 INCHES DEEP ON THE CONTOUR FOUR TO SIX MONTHS PRIOR TO PLANTING. SUBSOILING SHOULD BE DONE WHEN THE SOIL IS DRY, PREFERABLY IN AUGUST OR SEPTEMBER.

D. LIME AND FERTILIZER - RATES AND ANALYSIS

1. WHERE PERMANENT VEGETATION IS TO BE ESTABLISHED, AGRICULTURAL LIME SHALL BE APPLIED AS INDICATED BY SOIL TEST OR AT THE RATE OF 1 TO 2 TONS PER ACRE. AGRICULTURAL LIME SHALL BE WITHIN THE SPECIFICATIONS OF THE GEORGIA DEPARTMENT OF AGRICULTURE.
2. LIME SPREAD BY CONVENTIONAL EQUIPMENT WILL BE "GROUND LIMESTONE". GROUND LIMESTONE IS CALCITIC OR DOLOMITIC LIMESTONE GROUND SO THAT 90 PERCENT OF THE MATERIAL WILL PASS THROUGH A 10-MESH SIEVE AND NOT LESS THAN 25 PERCENT WILL PASS THROUGH A 100-MESH SIEVE.
3. AGRICULTURAL LIME SPREAD BY HYDRAULIC SEEDING EQUIPMENT WILL BE "FINELY GROUND LIMESTONE." FINELY GROUND IMESTONE IS CALCITIC OR DOLOMITIC LIMESTONE GROUND SO THAT 98 PERCENT OF THE MATERIAL WILL PASS THROUGH A 20-MESH SIEVE AND NOT LESS THAN 70 PERCENT WILL PASS THROUGH A 100-MESH SIEVE.

SPECIES	BROADCAST RATES 2/ - PLS 3/ PER ACRE	BROADCAST RATES 2/ - PLS 3/ PER 1000 SQ. FT.	RESOURCE AREA	PLANTING RATES BY RESOURCE AREA PLANTING DATES (▬ OPTIMUM, — PERMISSIBLE BUT MARGINAL) J F M A M J J A S O N D	REMARKS
FESCUE, TALL (FESTUCA ARUNDINACEA) ALONE WITH OTHER PERENNIALS	50 LBS 30 LBS	1.1 LB 0.7 LB	M-L P		227,000 SEED PER POUND. USE ALONE ONLY ON BETTER SITES. NOT FOR DROUGHTY SOILS. MIX WITH PERENNIAL CROWNVETCH. APPLY TOPDRESSING IN SPRING FOLLOWING FALL PLANTINGS. NOT FOR HEAVY USE AREAS OR ATHLETIC FIELDS.
LOVEGRASS, WEEPING (ERAGROSTIS CURVULA) ALONE WITH OTHER PERENNIALS	4 LBS 2 LBS	0.1 LB 0.05 LB	M-L P C		1,500,000 SEED PER POUND. QUICK COVER. DROUGHT TOLERANT.
PERENNIAL RYEGRASS (LOLIUM PERENNE) ANNUAL RYEGRASS (LOLIUM MULTIFLORUM)	30 LBS 30 LBS	0.6 LB 0.6 LB	M-L P C		330,000 SEED PER POUND FOR PERENNIAL RYEGRASS, 190,000 SEED PER POUND FOR ANNUAL RYEGRASS. TOLERATES PARTIAL SHADE.

FERTILIZER REQUIREMENTS

TYPE OF SPECIES	YEAR	ANALYSIS OR EQUIVALENT N-P-K	RATE	N TOP DRESSING RATE
1. COOL SEASON GRASSES	FIRST SECOND MAINTENANCE	6-12-12 6-12-12 10-10-10	1500 LBS./AC. 1000 LBS./AC. 400 LBS./AC.	50-100 LBS./AC. 1/ 2/ - 30
2. COOL SEASON GRASSES AND LEGUMES	FIRST SECOND MAINTENANCE	6-12-12 0-10-10 0-10-10	1500 LBS./AC. 1000 LBS./AC. 400 LBS./AC.	0-50 LBS./AC. 1/ - -
3. GROUND COVERS	FIRST SECOND MAINTENANCE	10-10-10 10-10-10 10-10-10	1300 LBS./AC. 3/ 1300 LBS./AC. 3/ 1100 LBS./AC.	- - -
4. TEMPORARY COVER CROPS SEEDED ALONE	FIRST	10-10-10	500 LBS./AC.	30 LBS./AC. 5/
5. WARM SEASON GRASSES	FIRST SECOND MAINTENANCE	6-12-12 6-12-12 10-10-10	1500 LBS./AC. 800 LBS./AC. 400 LBS./AC.	50-100 LBS./AC. 2/ 6/ 50-100 LBS./AC. 2/ 30 LBS./AC.
6. WARM SEASON GRASSES AND LEGUMES	FIRST SECOND MAINTENANCE	6-12-12 0-10-10 0-10-10	1500 LBS./AC. 1000 LBS./AC. 400 LBS./AC.	50 LBS./AC. 6/

1/ APPLY IN SPRING FOLLOWING SEEDING.
2/ APPLY IN SPLIT APPLICATIONS WHEN HIGH RATES ARE USED.
3/ APPLY IN 3 SPLIT APPLICATIONS.
4/ APPLY WHEN PLANTS ARE PRUNED.
5/ APPLY TO GRASS SPECIES ONLY.
6/ APPLY WHEN PLANTS GROW TO A HEIGHT OF 2 TO 4 INCHES.

D. LIME AND FERTILIZER - APPLICATION

1. WHEN HYDRAULIC SEEDING EQUIPMENT IS USED:
   THE INITIAL FERTILIZER WILL BE MIXED WITH SEED, INOCULANT (IF NEEDED) AND WOOD CELLULOSE OR WOOD PULP FIBER MULCH AND APPLIED IN A SLURRY. THE SLURRY WILL BE AGITATED DURING APPLICATION TO KEEP THE INGREDIENTS THOROUGHLY MIXED. THE MIXTURE WILL BE SPREAD UNIFORMLY OVER THE AREA WITHIN ONE HOUR AFTER BEING PLACED IN THE HYDROSEEDER. FINELY GROUND LIMESTONE WILL BE MIXED WITH WATER AND APPLIED IMMEDIATELY AFTER MULCHING IS COMPLETED OR IN COMBINATION WITH THE TOP DRESSING.
2. WHEN CONVENTIONAL PLANTING IS TO BE DONE, LIME AND FERTILIZER WILL BE APPLIED UNIFORMLY IN ONE OF THE FOLLOWING WAYS:
   a. APPLY BEFORE LAND PREPARATION SO THAT IT WILL BE MIXED WITH THE SOIL DURING SEEDBED PREPARATION; OR,
   b. MIX WITH THE SOIL USED TO FILL THE HOLES, DISTRIBUTE IN FURROWS; OR,
   c. BROADCAST AFTER STEEP SURFACES ARE SCARIFIED, PITTED OR TRENCHED.
   d. A FERTILIZER PELLET WILL BE PLACED AT ROOT DEPTH.

* REVISED PER LATEST EDITION OF MANUAL FOR EROSION & SEDIMENT CONTROL IN GEORGIA.

A3 DISTURBED AREAS STABILIZATION WITH PERMANENT VEGETATION

SCALE: N.T.S.

Ds3

PERMIT SET

SANDY SPRINGS GEORGIA

GEORGIA REGISTERED LANDSCAPE ARCHITECT No. 1229 ROBERT BRADLEY JONES
GSWCC: #31792
10/21/2019
SEAL

MARK	DESCRIPTION	DATE	APPR.
0	BID SET	2019.10.16	

DESIGNED BY: PBT | DWN BY: PBT | CKD BY: RBJ | SUBMITTED BY: PBT | FILE NAME: CE501.dwg | SIZE: 22" x 34" | PLOT SCALE: 1:1
DATE: OCTOBER 16, 2019 | SOLICITATION NO.: - | CONTRACT NO.: - | FILE NUMBER: - | PLOT DATE: 10/21/2019

CITY OF SANDY SPRINGS
1 GALAMBOS WAY
SANDY SPRINGS, GA 30328

POND
3500 Parkway Lane
Peachtree Corners, GA 30092, SUITE 500
Phone 678.336.7740
Fax 678.336.7744
POND PROJECT No. 1190708

HERITAGE PARK IMPROVEMENTS
EROSION & SEDIMENT CONTROL DETAILS

SHEET IDENTIFICATION NUMBER
CE501

FILE PATH: \\ACP3SERVER\RESOURCES\PROJECTS\FY19\1190708\04_CAD_BIM\04.02_CAD\CE501.DWG PLOTTED BY: JONES, BRAD

COORDINATE WITH LANDSCAPE PLANS

DEFINITION
A PERMANENT VEGETATIVE COVER USING SODS ON HIGHLY ERODIBLE OR CRITICALLY ERODED LANDS.

CONDITIONS
THIS APPLICATION IS APPROPRIATE FOR AREAS WHICH REQUIRE IMMEDIATE VEGETATIVE COVERS, DROP INLETS, GRASS SWALES, AND WATERWAYS WITH INTERMITTENT FLOW.

PLANNING CONSIDERATIONS
SODDING CAN INITIALLY BE MORE COSTLY THAN SEEDING, BUT THE ADVANTAGES JUSTIFY THE INCREASED INITIAL COSTS.

1. IMMEDIATE EROSION CONTROL, GREEN SURFACE, AND QUICK USE.
2. REDUCED FAILURE AS COMPARED TO SEED AS WELL AS THE LACK OF WEEDS
3. CAN BE ESTABLISHED NEARLY YEAR-ROUND.

SODDING IS PREFERABLE TO SEED IN WATERWAYS AND SWALES BECAUSE OF THE IMMEDIATE PROTECTION OF THE CHANNEL AFTER APPLICATION. SODDING MUST BE STAKED IN CONCENTRATED FLOW AREAS (SEE FIGURE 6-6.1) CONSIDER USING SOD FRAMED AROUND DROP INLETS TO REDUCE SEDIMENTS AND MAINTAINING THE GRADE.

CONSTRUCTION SPECIFICATIONS INSTALLATION
SOIL PREPARATION

BRING SOIL SURFACE TO FINAL GRADE. CLEAR SURFACE OF TRASH, WOODY DEBRIS, STONES AND CLODS LARGER THAN 1". APPLY SOD TO SOIL SURFACES ONLY AND NOT FROZEN SURFACES, OR GRAVEL TYPE SOILS. TOPSOIL PROPERLY APPLIED WILL HELP GUARANTEE A STAND. DON'T USE TOPSOIL RECENTLY TREATED WITH HERBICIDES OR SOIL STERILANTS. MIX FERTILIZER INTO SOIL SURFACE. FERTILIZE BASED ON SOIL TESTS OR TABLE 6-6.1.

INSTALLATION
LAY SOD WITH TIGHT JOINTS AND IN STRAIGHT LINES. DON'T OVERLAP JOINTS. STAGGER JOINTS AND DO NOT STRETCH SOD (SEE FIGURE 6-6.2). ON SLOPES STEEPER THAN 3:1, SOD SHOULD BE ANCHORED WITH PINS OR OTHER APPROVED METHODS. INSTALLED SOD SHOULD BE ROLLED OR TAMPED TO PROVIDE GOOD CONTACT BETWEEN SOD AND SOIL. IRRIGATE SOD AND SOIL TO A DEPTH OF 4" IMMEDIATELY AFTER INSTALLATION. SOD SHOULD NOT BE CUT OR SPREAD IN EXTREMELY WET OR DRY WEATHER. IRRIGATION SHOULD BE USED TO SUPPLEMENT RAINFALL FOR A MINIMUM OF 2-3 WEEKS.

MATERIALS
SOD SELECTED SHOULD BE CERTIFIED. SOD GROWN IN THE GENERAL AREA OF THE PROJECT IS DESIRABLE.

1. SOD SHOULD BE MACHINE CUT AND CONTAIN 3/4" (+ OR - 1/4 ") OF SOIL, NOT INCLUDING SHOOTS OR THATCH.
2. SOD SHOULD BE CUT TO THE DESIRED SIZE WITHIN + OR -5% TORN OR UNEVEN PADS SHOULD BE REJECTED.
3. SOD SHOULD BE CUT AND INSTALLED WITHIN 36 HOURS OF DIGGING.
4. AVOID PLANTING WHEN SUBJECT TO FROST HEAVE OR HOT WEATHER IF IRRIGATION IS NOT AVAILABLE
5. THE SOD TYPE SHOULD BE SHOWN ON THE PLANS OR INSTALLED ACCORDING TO TABLE 6-6.2. SEE FIGURE 6-4.1 FOR YOUR RESOURCE AREA.

MAINTENANCE
RE-SOD AREAS WHERE AN ADEQUATE STAND OF SOD IS NOT OBTAINED. NEW SOD SHOULD BE MOWED SPARINGLY. GRASS HEIGHT SHOULD NOT BE CUT LESS THAN 2"-3" OR AS SPECIFIED (SEE FIGURE 6-6.2). APPLY ONE TON OF AGRICULTURAL LIME AS INDICATED BY SOIL TEST OR EVERY 4-6 YEARS. FERTILIZE GRASSES IN ACCORDANCE WITH SOIL TESTS OR TABLE 6-6.3

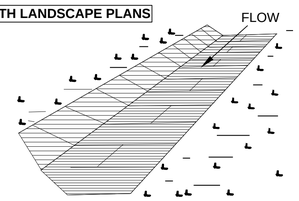

LAY SOD ACROSS THE DIRECTION OF FLOW

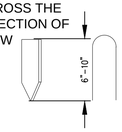

USE PEGS OR STAPLES TO FASTEN SOD FIRMLY - AT THE ENDS OF STRIPS AND IN THE CENTER, OR EVERY 3-4 FEET IF THE STRIPS ARE LONG. WHEN READY TO MOW, DRIVE PEGS OR STAPLES FLUSH WITH THE GROUND.

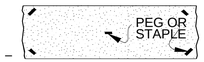

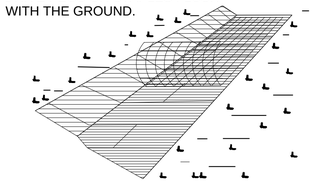

IN CRITICAL AREAS, SECURE SOD WITH NETTING. USE STAPLES

SODDING

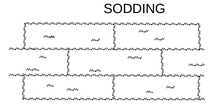

LAY SOD IN A STAGGERED PATTERN. BUTT THE STRIPS TIGHTLY AGAINST EACH OTHER. DO NOT LEAVE SPACES AND DO NOT OVERLAP. A SHARPENED MASON'S TROWEL IS A HANDY TOOL FOR TUCKING DOWN THE ENDS AND TRIMMING PIECES

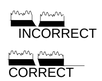

BUTTING-- ANGLED ENDS CAUSED BY THE AUTOMATIC SOD CUTTER MUST BE MATCHED CORRECTLY.

TABLE 6-6.1 FERTILIZER REQUIREMENTS FOR SOIL SURFACE APPLICATION

FERTILIZER TYPE	FERTILIZER RATE (LBS./ACRE)	FERTILIZER RATE (LBS./SQ.FT.)	SEASON
10-10-10	1000	.25	FALL

TABLE 6-6.2 SOD PLANTING REQUIREMENTS

GRASS	VARIETIES	RESOURCE AREA	GROWING SEASON
BERMUDAGRASS	COMMON TIFFWAY TIFGREEN TIFLAWN	M-L, P,C P,C P,C P,C	WARM WEATHER
BAHIAGRASS	PENSACOLA	P,C	WARM WEATHER
CENTIPEDE	-	P,C	WARM WEATHER
ST. AUGUSTINE	COMMON BITTERBLUE RALEIGH	C	WARM WEATHER
ZOYSIA	EMERALD MEYER	P,C	WARM WEATHER
TALL FESCUE	KENTUCKY	M-L,P	COOL WEATHER

ROLL SOD IMMEDIATELY TO ACHIEVE FIRM CONTACT WITH THE SOIL

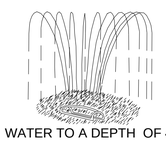

WATER TO A DEPTH OF 4" AS NEEDED. WATER WELL AS SOON AS THE SOD IS LAID

MOW WHEN THE SOD IS ESTABLISHED - IN 2-3 WEEKS. SET THE MOWER HIGH (2"-3").

APPEARANCE OF GOOD SOD

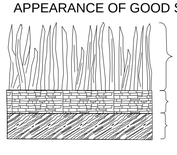

SHOOTS OR GRASS BLADES. GRASS SHOULD BE GREEN AND HEALTHY. MOWED AT 2"- 3" CUTTING HEIGHT

THATCH - GRASS CLIPPINGS AND DEAD LEAVES, UP TO 1/2 " THICK

ROOT ZONE - SOIL AND ROOTS SHOULD BE 1/2 " - 3/4 " THICK WITH DENSE ROOT MAT FOR STRENGTH

TABLE 6-6.3 FERTILIZER REQUIREMENTS FOR SOD

TYPES OF SPECIES	PLANTING YEAR	FERTILIZER (N-P-K)	RATE (lbs./acre)	NITROGEN TOP DRESSING RATE (lbs./acre)
COOL SEASON GRASSES	FIRST SECOND MAINTENANCE	6-12-12 6-12-12 10-10-10	1500 1000 400	50-100 -- 30
WARM SEASON GRASSES	FIRST SECOND MAINTENANCE	6-12-12 6-12-12 10-10-10	1500 800 400	50-100 50-100 30

A1 DISTURBED AREAS STABILIZATION WITH SODDING

NO SCALE

Ds4

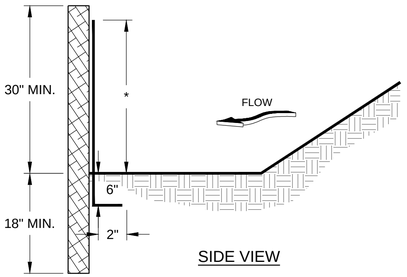

SIDE VIEW

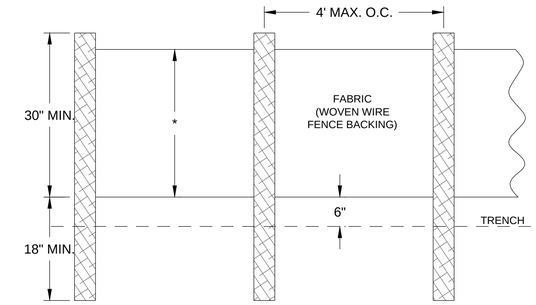

FRONT VIEW

MAINTENANCE

SEDIMENT SHALL BE REMOVED ONCE IT HAS ACCUMULATED TO ONE-HALF THE ORIGINAL HEIGHT OF THE BARRIER. SEDIMENT BARRIERS SHALL BE REPLACED WHENEVER THEY HAVE DETERIORATED TO SUCH AN EXTENT THAT THE EFFECTIVENESS OF THE PRODUCT IS REDUCED (APPROXIMATELY SIX MONTHS) OR THE HEIGHT OF THE PRODUCT IS NOT MAINTAINING 80% OF ITS PROPERLY INSTALLED HEIGHT.

TEMPORARY SEDIMENT BARRIERS SHALL REMAIN IN PLACE UNTIL DISTURBED AREAS HAVE BEEN PERMANENTLY STABILIZED. ALL SEDIMENT ACCUMULATED AT THE BARRIER SHALL BE REMOVED AND PROPERLY DISPOSED OF BEFORE THE BARRIER IS REMOVED.

NOTES

1. USE STEEL POSTS WITH WIRE MESH REINFORCEMENT, SEDIMENTATION, AND POLLUTION CONTROL PLAN.
2. HEIGHT (*) IS TO BE SHOWN ON THE EROSION, SEDIMENTATION, AND POLLUTION CONTROL PLAN.
3. IN AREAS OF DOUBLE ROW TYPE "S" FENCE, DIRECTLY ADJACENT TO STREAM BUFFERS (WITHIN 50'), PROVIDE 6" OF HAY OR SHREDDED WOOD MULCH IN BETWEEN FENCE ROWS.
4. IN AREAS ON PLANS WHERE SILT FENCE IS SHOWN OVER TREES, ADJUST SILT FENCE AROUND TREES TO REMAIN AS NEEDED.

DISTURBED AREA DRAINED TREATED BY Sd1-S and Sd1-NS		TOTAL LENGTH OF Sd1-S PROVIDED		TOTAL LENGTH OF Sd1-NS PROVIDED		HEIGHT OF SEDIMENT STORED ON Sd1-S (IN)	HEIGHT OF SEDIMENT STORED ON Sd1-CFS (IN)	REQUIRED STORAGE 67 CY/ACRE	PROVIDED STORAGE Sd1-S	PROVIDED STORAGE Sd1-CFS	TOTAL PROVIDED STORAGE
AC	SY	FT	YD	FT	YD	IN	IN	CY	CY	CY	CY
.11	4840	85	28	24	8	30	9.5	7	25	0	16.5

Appendix A—Volume of Silt Fence Storage Capacity For Various Configurations of Ground Surface Slope, Silt Fence Height, and Width

Silt fence Height ft	Silt fence Width ft	Silt fence maximum holding capacities (ft³) Ground surface slope (%) 5	10	15	20	25	30	35	40	45	50	55	60	65	70
1.5	10	177	88	59	44	35	29	25	22	20	18	16	15	14	13
1.5	20	353	177	118	88	71	59	50	44	39	35	32	29	27	25
1.5	30	530	265	177	133	106	88	76	66	59	53	48	44	41	38
1.5	40	707	353	236	177	141	118	101	88	79	71	64	59	54	50
1.5	50	884	442	295	221	177	147	126	110	98	88	80	74	68	63
2.0	10	314	157	105	79	63	52	45	39	35	31	29	26	24	22
2.0	20	628	314	209	157	126	105	90	79	70	63	57	52	48	45
2.0	30	942	471	314	236	188	157	135	118	105	94	86	79	72	67
2.0	40	1,257	628	419	314	251	209	180	157	140	126	114	105	97	90
2.0	50	1,571	785	524	393	314	262	224	196	175	157	143	131	121	112
2.5	10	491	245	164	123	98	82	70	61	55	49	45	41	38	35
2.5	20	982	491	327	245	196	164	140	123	109	98	89	82	76	70
2.5	30	1,473	736	491	368	295	245	210	184	164	147	134	123	113	105
2.5	40	1,963	982	654	491	393	327	280	245	218	196	178	164	151	140
2.5	50	2,454	1,227	818	614	491	409	351	307	273	245	223	205	189	175

10 USDA Forest Service Gen. Tech. Rep. RMRS-GTR-94

NOTE:
1. SILT FENCE ALONE HAS ENOUGH STORAGE CAPACITY FOR THE TOTAL DISTURBED AREA TREATED. FILTER SOCKS ALLOW FILTRATION OF RUNOFF INTO EXISTING DRIVE AND REMOVAL OF TOTAL SUSPENDED SOLIDS. FILTER SOCKS ARE TO BE USED FOR FILTERING RUNOFF WHILE IT FLOWS INTO EXISTING CURB INLET.
2. TOTAL SUSPENDED SOLIDS GROUND SURFACE SLOPE VARIES. SOME AREAS ARE FROM 3:1 AND 2:1 SLOPES WHILE OTHERS FOLLOW THE EXISTING GRADE OF THE SITE AT LESS THAN 5%. 30% SLOPE IS USED FOR CONSERVATIVE ESTIMATE.
3. AREAS CONSIDERED SENSITIVE ARE SHOWN WITH DOUBLE-ROW SILT FENCE, BUT LENGTH IS NOT CALCULATED TWICE FOR STORAGE CAPACITY.
4. SILT FENCE STORAGE CAPACITY CHART REFERENCED IN APPENDIX A OF USDA "SILT FENCES: AN ECONOMICAL TECHNIQUE FOR MEASURING HILLSLOPE SOIL EROSION".

A3 SILT FENCE - SENSITIVE

SCALE: N.T.S.

Sd1-S 30"

PERMIT SET

SANDY SPRINGS GEORGIA

GEORGIA REGISTERED No. 1339 LANDSCAPE ARCHITECT ROBERT BRADLEY JONES
GSWCC: #31792
10/21/2019 SEAL

MARK	DESCRIPTION	DATE	APPR.
0	BID SET	2019.10.16	

DESIGNED BY: PBT | DATE: OCTOBER 16, 2019
DWN BY: PBT | CKD BY: RBJ | SOLICITATION NO.: -
SUBMITTED BY: PBT | CONTRACT NO.: -
FILE NAME: CE501.dwg | FILE NUMBER: -
SIZE: 22" X 34" | PLOT SCALE: 1:1 | PLOT DATE: 10/21/2019

CITY OF SANDY SPRINGS
1 GALAMBOS WAY
SANDY SPRINGS, GA 30328

POND
3500 Parkway Lane
Norcross, Georgia 30092
Phone 678.336.7740 Fax 678.336.7744
POND PROJECT No. 1190708

HERITAGE PARK IMPROVEMENTS

EROSION & SEDIMENT CONTROL DETAILS

SHEET IDENTIFICATION NUMBER
CE502

FILE PATH: \\ACP2SERVER\RESOURCES\PROJECTS\FY19\1190708\04.CAD_BIM\04.02.CAD\CE501.DWG PLOTTED BY: JONES, BRAD

CONSTRUCTION SPECIFICATIONS

1. LOCATE WASHOUT STRUCTURE A MINIMUM OF 50 FEET AWAY FROM OPEN CHANNELS, STORM DRAIN INLETS, SENSITIVE AREAS, WETLANDS, BUFFERS AND WATER COURSES.
2. SIZE WASHOUT STRUCTURE FOR VOLUME NECESSARY TO CONTAIN WASH WATER AND SOLIDS AND MAINTAIN AT LEAST 4 INCHES OF FREEBOARD. TYPICAL DIMENSIONS ARE 10 FEET X 10 FEET X 3 FEET DEEP.
3. PREPARE SOIL BASE FREE OF ROCKS OR OTHER DEBRIS THAT MAY CAUSE TEARS OR HOLES IN THE LINER. FOR LINER, USE 10 MIL OR THICKER UV RESISTANT, IMPERMEABLE SHEETING, FREE OF HOLES AND TEARS OR OTHER DEFECTS THAT COMPROMISE IMPERMEABILITY OF THE MATERIAL.
4. PROVIDE A SIGN FOR THE WASHOUT IN CLOSE PROXIMITY TO THE FACILITY.
5. KEEP CONCRETE WASHOUT STRUCTURE WATER TIGHT. REPLACE IMPERMEABLE LINER IF DAMAGED (E.G., RIPPED OR PUNCTURED). EMPTY OR REPLACE WASHOUT STRUCTURE THAT IS 75 PERCENT FULL, AND DISPOSE OF ACCUMULATED MATERIAL PROPERLY. DO NOT REUSE PLASTIC LINER. WET-VACUUM STORED LIQUIDS THAT HAVE NOT EVAPORATED AND DISPOSE OF IN AN APPROVED MANNER. PRIOR TO FORECASTED RAINSTORMS, REMOVE LIQUIDS OR COVER STRUCTURE TO PREVENT OVERFLOWS. REMOVE HARDENED SOLIDS, WHOLE OR BROKEN UP, FOR DISPOSAL OR RECYCLING. MAINTAIN RUNOFF DIVERSION AROUND EXCAVATED WASHOUT STRUCTURE UNTIL STRUCTURE IS REMOVED.
6. WASHOUT OF THE DRUM AT THE CONSTRUCTION SITE IS PROHIBITED.
7. A VINYL WASHOUT CONTAINER OR METAL WASHOUT CONTAINER MAY BE USED ALTERNATIVELY TO AN EXCAVATED WASHOUT STRUCTURE WITH THE CONDITION THAT THE STRUCTURES MEET THE AFOREMENTIONED SPECIFICATIONS.

CONSTRUCTION EXIT NOTES:

1. AVOID LOCATING ON STEEP SLOPES OR AT CURVES ON PUBLIC ROADS.
2. REMOVE ALL VEGETATION AND OTHER UNSUITABLE MATERIAL FROM THE FOUNDATION AREA, GRADE, AND CROWN FOR POSITIVE DRAINAGE.
3. WHEN WASHING IS REQUIRED, IT SHOULD BE DONE ON AN AREA STABILIZED WITH CRUSHED STONE THAT DRAINS INTO AN APPROVED SEDIMENT TRAP OR SEDIMENT BASIN (DIVERT ALL SURFACE RUNOFF AND DRAINAGE FROM THE ENTRANCE TO A SEDIMENT CONTROL DEVICE).
4. WASHRACKS AND/OR TIRE WASHERS MAY BE REQUIRED DEPENDING ON SCALE AND CIRCUMSTANCE. IF NECESSARY, WASHRACK DESIGN MAY CONSIST OF ANY MATERIAL SUITABLE FOR TRUCK TRAFFIC THAT REMOVES MUD AND DIRT.
5. MAINTAIN AREA IN A WAY THAT PREVENTS TRACKING AND/OR FLOW OF MUD ONTO PUBLIC RIGHTS-OF-WAYS. THIS MAY REQUIRE TOP DRESSING, REPAIR AND/OR CLEANOUT OF ANY MEASURES USED TO TRAP SEDIMENT.

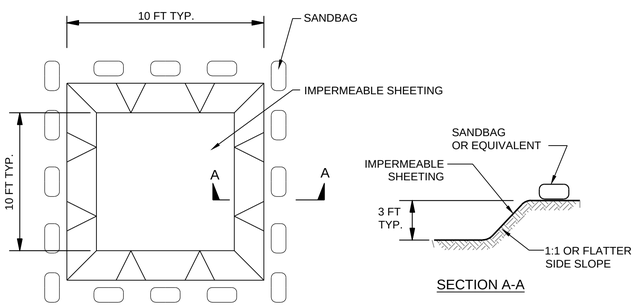

PLAN

EXCAVATED WASHOUT STRUCTURE

DESIGN PROFESSIONAL:
BRAD JONES, PL.A.
LEVEL II CERTIFICATION
No.: 000031792

B1 CONCRETE WASHDOWN AREA (CONSTRUCTION EXIT)

NO SCALE

Co

NOTES:

1. Tree protection fencing to be installed prior to any land disturbance on site.
2. Locate fencing at edge of CRZ, or against pavement edges, as per approved site plans.
3. Fencing must remain through the duration of all construction activities. Removal or relocation of fencing for temporary access must be replaced daily and immediately upon completion of work requiring access. Temporary access must be approved in advance by the COSS Arborist.
4. Activities within tree protection area are not permitted, including staging of materials, parking, pedestrian access, etc.
5. Where tree protection is adjacent to erosion control fencing, tree fence must be visible and at full 4' height min. on the inside of tree save area.
6. Where tree protection fencing encroaches on CRZ of existing trees to remain, of any size, in areas of cutting grade, tree roots are to be cut below grade to depth of 12" with clean sharpened implements.

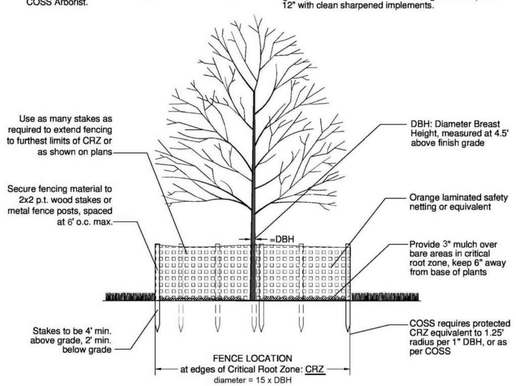

A1 TREE PROTECTION FENCING

NO SCALE

Tr

METHODS AND MATERIALS

A. TEMPORARY METHODS

MULCHES.
SEE STANDARD DS1 - DISTURBED AREA STABILIZATION (WITH MULCHING ONLY). SYNTHETIC RESINS MAY BE USED INSTEAD OF ASPHALT TO BIND MULCH MATERIAL. REFER TO SPECIFICATION TAC - TACKIFERS. RESINS SHOULD BE USED ACCORDING TO MANUFACTURER'S RECOMMENDATIONS.

VEGETATIVE COVER.
SEE SPECIFICATION DS2 - DISTURBED AREA STABILIZATION (WITH TEMPORARY SEEDING).

SPRAY-ON ADHESIVES.
THESE ARE USED ON MINERAL SOILS (NOT EFFECTIVE ON MUCK SOILS). KEEP TRAFFIC OFF THESE AREAS. REFER TO SPECIFICATION TAC-TACKIFERS.

TILLAGE.
THIS PRACTICE IS DESIGNED TO ROUGHEN AND BRING CLODS TO THE SURFACE. IT IS AN EMERGENCY MEASURE THAT SHOULD BE USED BEFORE WIND ERO-SION STARTS. BEGIN PLOWING ON WINDWARD SIDE OF SITE. CHISEL-TYPE PLOWS SPACED ABOUT 12 INCHES APART, SPRING-TOOTHED HARROWS, AND SIMILAR PLOWS ARE EXAMPLES OF EQUIPMENT THAT MAY PRODUCE THE DESIRED EFFECT.

IRRIGATION.
THIS IS GENERALLY DONE AS AN EMERGENCY TREATMENT. SITE IS SPRINKLED WITH WATER UNTIL THE SURFACE IS WET. REPEAT AS NEEDED.

BARRIERS.
SOLID BOARD FENCES, SNOWFENCES, BURLAP FENCES, CRATE WALLS, BALES OF HAY AND SIMILAR MATERIAL CAN BE USED TO CONTROL AIR CURRENTS AND SOIL BLOWING. BARRIERS PLACED AT RIGHT ANGLES TO PREVAILING CURRENTS AT INTERVALS OF ABOUT 15 TIMES THEIR HEIGHT ARE EFFECTIVE IN CONTROLLING WIND EROSION.

B. PERMANENT METHODS

PERMANENT VEGETATION.
SEE SPECIFCATION DS3 -DISTURBED AREA STABILIZATION (WITH PERMANENT VEGETATION). EXISTING TREES AND LARGE SHRUBS MAY AFFORD VALUABLE PROTECTION IF LEFT IN PLACE.

TOPSOILING.
THIS ENTAILS COVERING THE SURFACE WITH LESS EROSIVE SOIL MATERIAL. SEE SPECIFCATION TP - TOPSOILING.

STONE.
COVER SURFACE WITH CRUSHED STONE OR COARSE GRAVEL. SEE SPECIFCATION CR-CONSTRUCTION ROAD STABILIZATION.

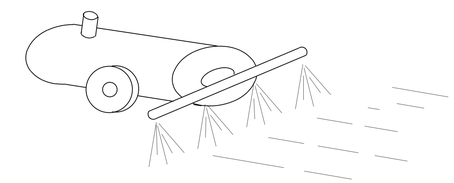

C3 DUST CONTROL

NO SCALE

Du

NOTES

1. IN AREAS OF DOUBLE ROW COMPOST FILTER SOCK DIRECTLY ADJACENT TO STREAM BUFFERS (WITHIN 50'), PROVIDE 4" OF HAY OR SHREDDED WOOD MULCH IN BETWEEN COMPOST FILTER SOCKS.
2. IN AREAS ON PLANS WERE FILTER SOCK IS SHOWN OVER TREES, ADJUST FILTER SOCK AS NEEDED AROUND TREES TO REMAIN.
3. SEPARATE SEGMENTS CONNECTED WITH A MIN. 18" OVERLAP AND STAKES IN BOTH ENDS.
4. MATERIAL TYPE TO BE BIODEGRADABLE. FILTER MEDIA TO MEET APPLICATION REQUIREMENTS.
5. COMPOST MATERIAL TO BE DISPERSED ON SITE.
6. FILTER SOCK SEDIMENT STORAGE CAPACITY DETERMINED BY USING APPENDIX A OF "SILT FENCES: AN ECONOMICAL TECHNIQUE FOR MEASURING HILLSLOPE SOIL EROSION" GENERAL TECHNICAL REPORT RMRS-GTR-94 ISSUED BY THE US FOREST SERVICE (SEE TYP S SEDIMENT BARRIER-SILT FENCE).

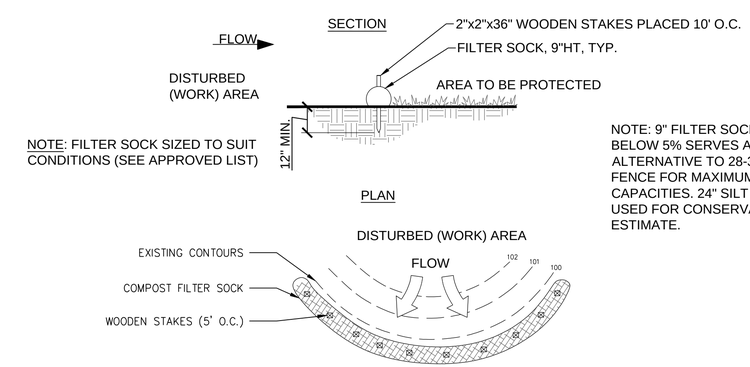

NOTE: 9" FILTER SOCK ON GRADE BELOW 5% SERVES AS ALTERNATIVE TO 28-36" SILT FENCE FOR MAXIMUM HOLDING CAPACITIES. 24" SILT FENCE IS USED FOR CONSERVATIVE ESTIMATE.

A3 TYPE NS SEDIMENT BARRIER: COMPOST FILTER SOCK

SCALE: N.T.S.

Sd1-NS
9"

PERMIT SET

SANDY SPRINGS
GEORGIA

GEORGIA REGISTERED No. 1239 LANDSCAPE ARCHITECT ROBERT BRADLEY JONES
GSWCC: #31792
10/21/2019 SEAL

MARK	DESCRIPTION	DATE	APPR.
0	BID SET	2019.10.16	

DESIGNED BY: PBT
DWN BY: PBT
CKD BY: RBJ
SUBMITTED BY: PBT
DATE: OCTOBER 16, 2019
SOLICITATION NO.: -
CONTRACT NO.: -
FILE NUMBER: -
FILE NAME: CE501.dwg
SCALE: 22" x 34" 1:1
PLOT DATE: 10/21/2019

CITY OF SANDY SPRINGS
1 GALAMBOS WAY
SANDY SPRINGS, GA 30328

POND
3500 Parkway Lane
Peachtree Corners, GA
Suite 100 30092
Phone 678.336.7740
Fax 678.336.7744
POND PROJECT No.1190708

HERITAGE PARK IMPROVEMENTS

EROSION & SEDIMENT CONTROL DETAILS

SHEET IDENTIFICATION NUMBER
CE503

FILE PATH: \\ACP3SERVER\RESOURCES\PROJECTS\FY19\1190708\04.CAD_BIM\04.02.CAD\CE501.DWG PLOTTED BY: JONES, BRAD

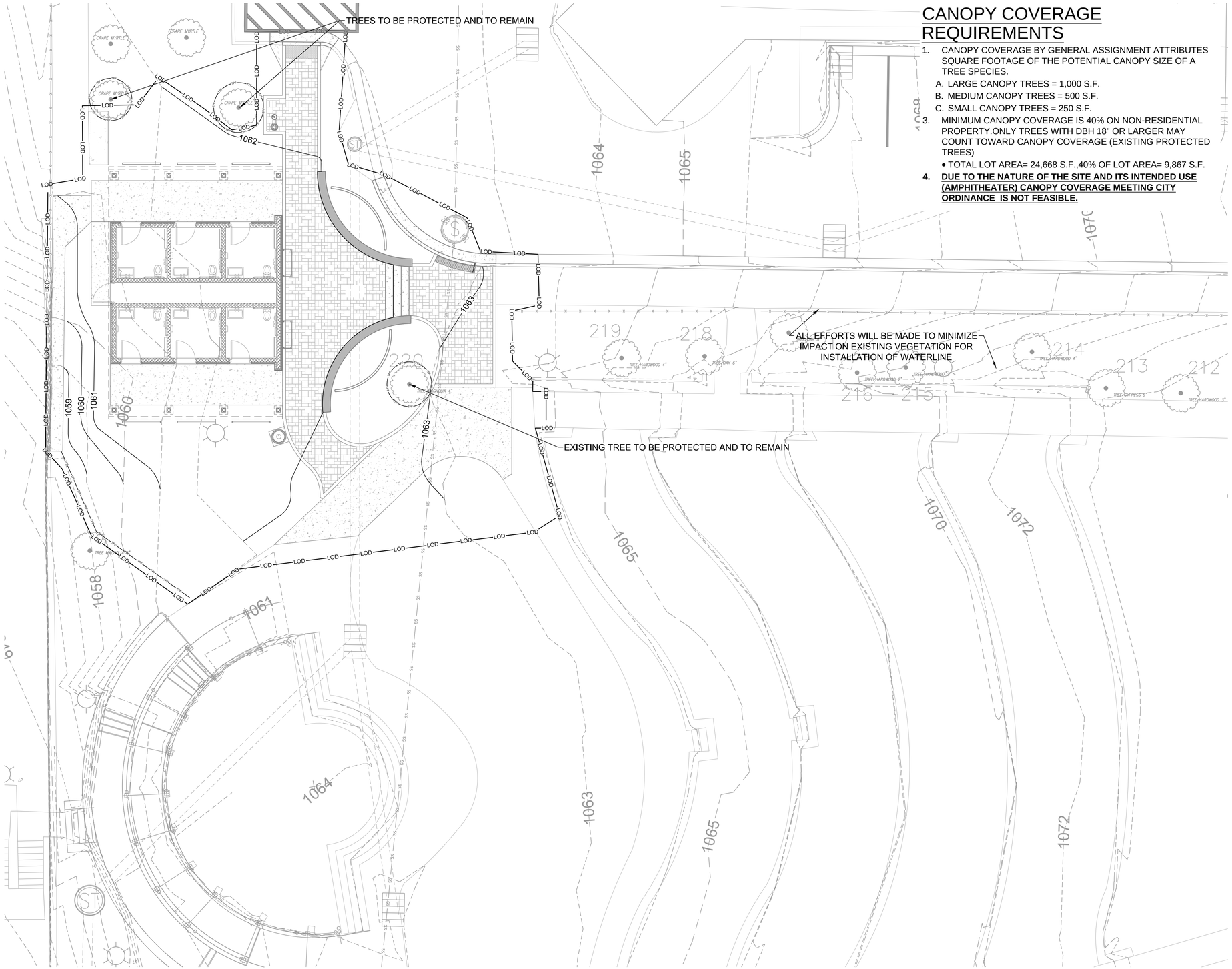

SCALE: 1/8" = 1'-0"

0 4' 8' 16' 24'

CANOPY COVERAGE REQUIREMENTS

1. CANOPY COVERAGE BY GENERAL ASSIGNMENT ATTRIBUTES SQUARE FOOTAGE OF THE POTENTIAL CANOPY SIZE OF A TREE SPECIES.
   A. LARGE CANOPY TREES = 1,000 S.F.
   B. MEDIUM CANOPY TREES = 500 S.F.
   C. SMALL CANOPY TREES = 250 S.F.
3. MINIMUM CANOPY COVERAGE IS 40% ON NON-RESIDENTIAL PROPERTY.ONLY TREES WITH DBH 18" OR LARGER MAY COUNT TOWARD CANOPY COVERAGE (EXISTING PROTECTED TREES)
   - TOTAL LOT AREA= 24,668 S.F.,40% OF LOT AREA= 9,867 S.F.
4. **DUE TO THE NATURE OF THE SITE AND ITS INTENDED USE (AMPHITHEATER) CANOPY COVERAGE MEETING CITY ORDINANCE IS NOT FEASIBLE.**

GENERAL SHEET NOTES

1. REFER TO SHEET C-001 AND C-002 FOR GENERAL NOTES AND LEGEND.
2. THIS SHEET IS PART OF A MULTI-SHEET SET OF CONSTRUCTION PLANS AND SHALL BE READ WITH THE FULL SET TO BEST ENSURE PROPER INTERPRETATION.
3. REFER TO DEMOLITION PLAN FOR TREES TO BE REMOVED.
4. REFER TO SHEET SERIES L-500 FOR LANDSCAPE NOTES AND PLANTING DETAILS.
5. INSTALL TREE PROTECTION FENCING PRIOR TO ANY LAND DISTURBANCE.
6. TREE CRITICAL ROOT ZONE (CRZ) IS BASED ON 1.25 FEET OF RADIUS FOR EVERY INCH OF DIAMETER BREAST HEIGHT (DBH) OR DRIP-LINE.
7. TREES THAT SUFFER DISTURBANCE TO 25% OF THE CRZ ARE CONSIDERED DESTROYED. EXCEPT AS SET FORTH IN SEC. 9.3.3.B, A TREE REMOVAL PERMIT IS REQUIRED WHERE ANY PROTECTED TREE, SETBACK TREE, BOUNDARY TREE, OR LANDMARK TREE ARE REMOVED OR 25% OR MORE OF THE CRZ IS DISTURBED.
8. PROTECTED TREE IS A TREE 18" DBH OR LARGER OTHER THAN LANDMARK OR SETBACK TREE, IN FAIR OR BETTER CONDITION.
9. BOUNDARY TREE MEANS A TREE 10" DBH OR LARGER LOCATED ON A PROPERTY ADJACENT TO A PERMITTING PROPERTY WHOSE CRITICAL ROOT ZONE OR CANOPY EXTENDS INTO THE PERMITTING PROPERTY.
10. NO LANDMARK TREES (HARDWOODS 27"+DBH, PINES 30"+DBH, AND DOGWOOD OR REDBUD 10"+) ARE ON PRESENT ON SITE.
11. REFER TO DETAIL A3/L-502 FOR GUIDANCE ON TUNNELING FOR UNDERGROUND UTILITIES NEAR EXISTING TREES TO REMAIN.

SHEET LEGEND

LOD LOD — LIMITS OF DISTURBANCE

TPF TPF — TREE PROTECTION FENCING

PERMIT SET

SANDY SPRINGS GEORGIA

GEORGIA REGISTERED No. 1239 LANDSCAPE ARCHITECT ROBERT BRADLEY JONES

GSWCC: #31792

10/21/2019 SEAL

MARK	DESCRIPTION	DATE	APPR.
0	BID SET	2019.10.16	

DESIGNED BY: PBT
DWN BY: PBT
CKD BY: RBJ
SUBMITTED BY: PBT
FILE NAME: LD101.dwg
SIZE: 22" X 34"
PLOT SCALE: 1:1
DATE: OCTOBER 16, 2019
SOLICITATION NO.: -
CONTRACT NO.: -
FILE NUMBER: -
PLOT DATE: 10/21/2019

CITY OF SANDY SPRINGS
1 GALAMBOS WAY
SANDY SPRINGS, GA 30328

POND
3500 Parkway Lane
Peachtree Corners, Ga
30092 USTS 170
Phone 678.336.7740
Fax 678.336.7744
POND PROJECT No. 1190708

HERITAGE PARK IMPROVEMENTS

TREE PROTECTION PLAN

SHEET IDENTIFICATION NUMBER

LD101

FILE PATH: \\ACP3SERVER\RESOURCES\PROJECTS\FY19\1190708\04.CAD_BIM\04.02.CAD\LD101.DWG PLOTTED BY: JONES, BRAD

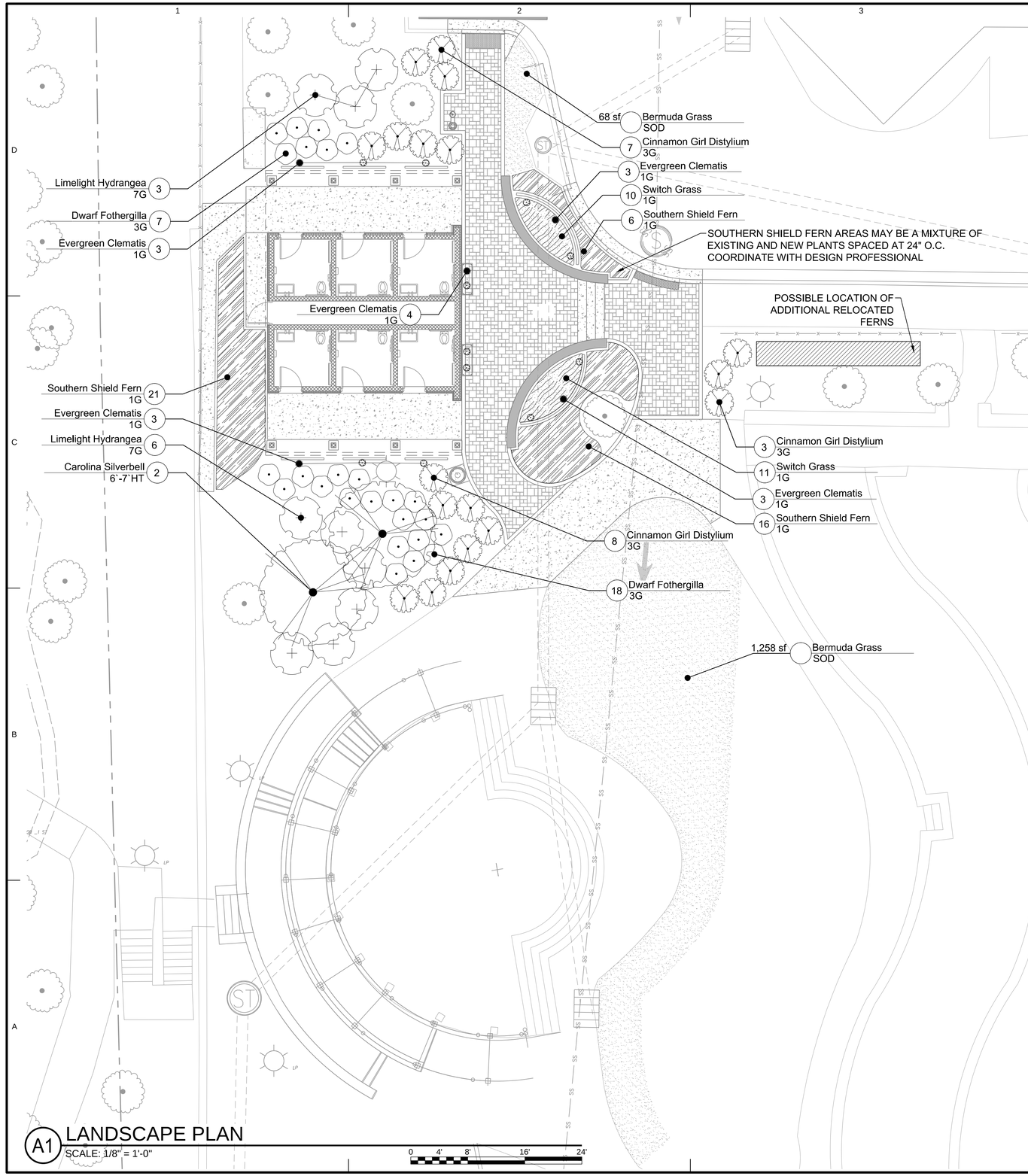

A1 LANDSCAPE PLAN
SCALE: 1/8" = 1'-0"

0 4' 8' 16' 24'

KEY MAP

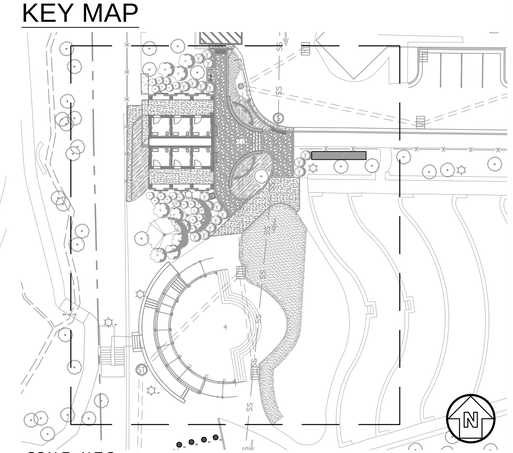

SCALE: N.T.S.

GENERAL SHEET NOTES

1. REFER TO SHEET C-001 AND C-002 FOR GENERAL CIVIL NOTES, LEGENDS, AND ABBREVIATIONS.
2. THIS SHEET IS PART OF A MULTI-SHEET SET OF CONSTRUCTION PLANS AND SHALL BE READ WITH THE FULL SET TO BEST ENSURE PROPER INTERPRETATION.

PERMIT SET

SANDY SPRINGS GEORGIA

GEORGIA REGISTERED No. 1239 LANDSCAPE ARCHITECT ROBERT BRADLEY JONES

GSWCC: #31792
10/21/2019 SEAL

MARK	DESCRIPTION	DATE	APPR.
0	BID SET	2019.10.16	

DESIGNED BY: PBT
DWN BY: PBT
CKD BY: RBJ
SUBMITTED BY: PBT
FILE NAME: LP101.dwg
SIZE: 22" x 34"
PLOT SCALE: 1:1
DATE: OCTOBER 16, 2019
SOLICITATION NO.: -
CONTRACT NO.: -
FILE NUMBER: -
PLOT DATE: 10/21/2019

CITY OF SANDY SPRINGS
1 GALAMBOS WAY
SANDY SPRINGS, GA 30328

POND
3500 Parkway Lane
Peachtree Corners, GA
30092 Suite 300
Phone 678.336.7740
Fax 678.336.7744
POND PROJECT No. 1190708

HERITAGE PARK IMPROVEMENTS

LANDSCAPE PLAN

SHEET IDENTIFICATION NUMBER
LP101

FILE PATH: \\ACPSSERVER\RESOURCES\PROJECTS\FY19\1190708\04.CAD_BIM\04.02.CAD\LP101.DWG PLOTTED BY: JONES, BRAD

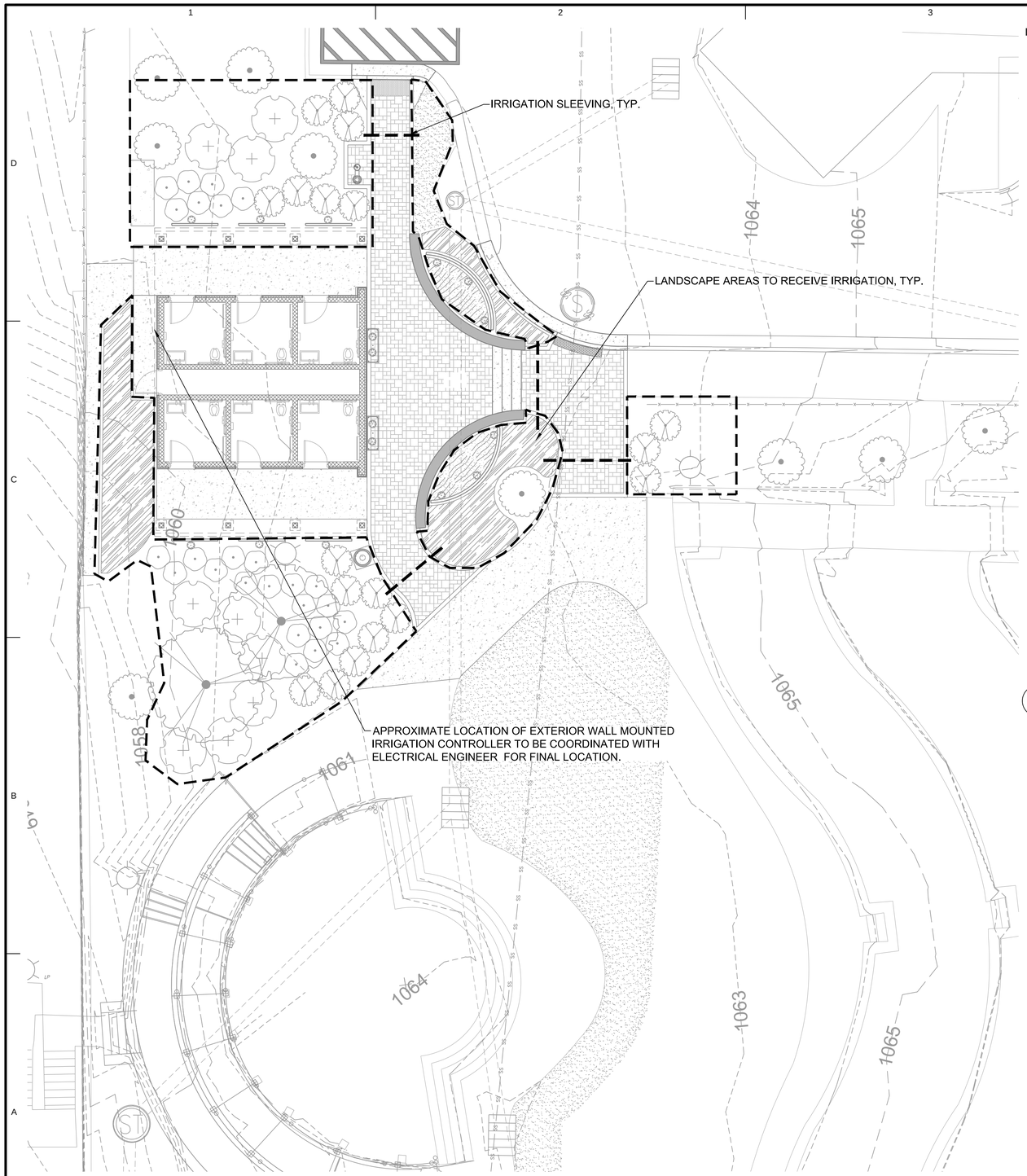

A1 DELEGATED IRRIGATION PLAN
SCALE: 1/8" = 1'-0"

0 4' 8' 16' 24'

IRRIGATION DELEGATED DESIGN NOTES:

1. CONTRACTOR TO BE RESPONSIBLE FOR PROVIDING DELEGATED-DESIGN SUBMITTAL FOR APPROVAL BY OWNER'S REPRESENTATIVE. CONTRACTOR TO SUBMIT DESIGN FOR IRRIGATION SYSTEM TO COMPLY WITH PERFORMANCE REQUIREMENTS AND CRITERIA, INCLUDING ANALYSIS DATA SIGNED AND SEALED BY THE QUALIFIED PROFESSIONAL ENGINEER RESPONSIBLE FOR THEIR PREPARATION.
2. REFER TO SPECIFICATIONS SECTION 328400 PLANTING IRRIGATION FOR THE BASIS OF DESIGN. REFER TO PLANTING IRRIGATION SPECIFICATION FOR REQUIRED SUBMITTALS, MATERIALS, PROCEDURES AND WARRANTIES.
3. LOCATION OF WATER METER AND CONTROLLER IS APPROXIMATE. CONTRACTOR TO CONFIRM WITH OWNER BEFORE INSTALLATION.
4. LOCATIONS OF AREAS TO BE IRRIGATED AS INDICATED ON THIS SHEET.
5. IRRIGATION METERS/BOXES TO BE LOCATED OUTSIDE OF PROPOSED OR EXISTING SIDEWALKS OR AREAS TO BE PAVED.
6. RECOMMENDED LOCATIONS OF IRRIGATION CONDUIT ARE SHOWN. CHANGES TO CONDUIT LOCATIONS SHALL BE APPROVED BY DESIGN PROFESSIONAL BEFORE INSTALLATION.
7. CONTRACTOR TO VERIFY REQUIRED WATER PRESSURE FOR SYSTEM REQUIREMENTS.
8. CONTRACTOR TO PROTECT EXISTING IRRIGATION SYSTEM AND MAINTAIN SYSTEM IN PROPER WORKING CONDITION. CONTRACTOR TO REPLACE DAMAGED IRRIGATION ELEMENTS IN AREAS WHERE EXISTING LANDSCAPE IS TO REMAIN.

NOTE: INSTALLER OF SLEEVES SHALL BE RESPONSIBLE TO LOCATE SLEEVES IF NOT PROPERLY MARKED.

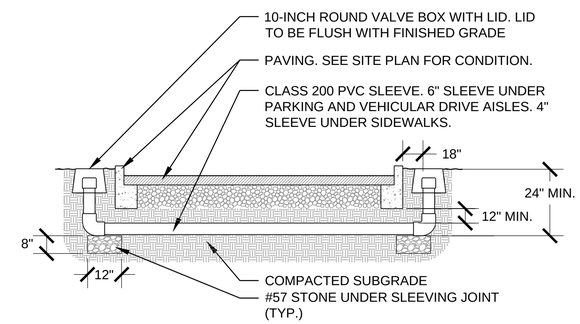

B3 IRRIGATION SLEEVING
SCALE: NTS

CALL 811 BEFORE ANY EXCAVATION WORK BEGINS OR ANY WORK BEGINS WITHIN TEN FT.(10') OF OVERHEAD POWER LINES OF 750 VOLTS OR MORE. SMART DIGGING MEANS CALLING 811 BEFORE EACH JOB. WHETHER YOU ARE A HOMEOWNER OR A PROFESSIONAL EXCAVATOR, ONE CALL TO 811 GETS YOUR UNDERGROUND UTILITY LINES MARKED FOR FREE.

GENERAL SHEET NOTES

1. REFER TO SHEET C-001 AND C-002 FOR GENERAL NOTES AND LEGEND.
2. THIS SHEET IS PART OF A MULTI-SHEET SET OF CONSTRUCTION PLANS AND SHALL BE READ WITH THE FULL SET TO BEST ENSURE PROPER INTERPRETATION.

SHEET LEGEND

—— —— —— IRRIGATION SLEEVING, TYP.

PERMIT SET

SANDY SPRINGS GEORGIA

GEORGIA REGISTERED No. 1239 LANDSCAPE ARCHITECT ROBERT BRADLEY JONES

GSWCC: #31792
10/21/2019 SEAL

MARK	DESCRIPTION	DATE	APPR.
0	BID SET	2019.10.16	

DESIGNED BY: PBT
DWN BY: PBT
CKD BY: RBJ
SUBMITTED BY: PBT
DATE: OCTOBER 16, 2019
SOLICITATION NO.: -
CONTRACT NO.: -
FILE NUMBER: -
FILE NAME: IR101.dwg
PLOT SCALE: 22" x 34" 1:1
PLOT DATE: 10/21/2019

CITY OF SANDY SPRINGS
1 GALAMBOS WAY
SANDY SPRINGS, GA 30328

POND
3500 Parkway Lane
Peachtree Corners, GA 30092, SUITE 400
Phone 678.336.7740
Fax 678.336.7744
POND PROJECT No. 11907 08

HERITAGE PARK IMPROVEMENTS

DELEGATED IRRIGATION PLAN

SHEET IDENTIFICATION NUMBER
IR101

FILE PATH: \\ACP3SERVER\RESOURCES\PROJECTS\FY19\11907 08\04.CAD_BIM\04.02.CAD\IR101.DWG PLOTTED BY: JONES, BRAD

GENERAL PLANTING NOTES:

1. ALL PLANTS SHALL BE HEALTHY, VIGOROUS, FREE OF PESTS AND DISEASE.

2. ALL PLANTS SHALL BE CONTAINER-GROWN, OR BALLED AND BURLAPPED AS SPECIFIED.

3. CONTRACTOR'S PRICE SHALL INCLUDE ALL LABOR AND MATERIAL NECESSARY TO COMPLETE THE WORK, I.E. MULCH, PLANTING, SOIL MIX, STAKING MATERIAL, WATERING, MAINTENANCE DURING CONSTRUCTION, ETC.

4. THE CONTRACTOR IS RESPONSIBLE FOR VERIFYING ALL MATERIAL QUANTITIES SHOWN ON THESE DRAWINGS BEFORE PRICING THE WORK, AND WILL BE RESPONSIBLE FOR INSTALLATION OF PLANT MATERIAL ACCORDING TO PLAN. THE PLANT SCHEDULE IS PROVIDED FOR CONTRACTOR'S CONVENIENCE ONLY.

5. PROVIDE PLANT MATERIALS TRUE TO SPECIES AND VARIETY COMPLYING WITH RECOMMENDATIONS OF "AMERICAN STANDARD FOR NURSERY STOCK" BY THE AMERICAN ASSOCIATION OF NURSERY MEN.

6. PLANTING PLANS INDICATE DIAGRAMMATIC LOCATIONS ONLY. SITE ADJUSTMENTS OF PLANTING DESIGN AND RELOCATION OF PLANT MATERIAL INSTALLED PRIOR TO DESIGN PROFESSIONAL OR OWNER'S REPRESENTATIVE'S APPROVAL SHALL BE DONE WITHOUT PENALTY OR ADDITIONAL COST TO OWNER. STAKE PLANT LOCATIONS AT SITE AND OBTAIN OWNER'S REPRESENTATIVE'S APPROVAL PRIOR TO PLANT INSTALLATION.

7. LOCATE AND VERIFY ALL UTILITY LOCATIONS AND EXISTING STRUCTURES IN AND AROUND THE SITE PRIOR TO WORK. BE FAMILIAR WITH UNDERGROUND UTILITIES BEFORE DIGGING. MAINTAIN EXISTING UTILITIES AND STRUCTURES AND PROTECT AGAINST DAMAGE DURING THE WORK. THE CONTRACTOR SHALL BE RESPONSIBLE FOR ANY DAMAGES TO EXISTING UTILITIES, STRUCTURES, PAVING AND/OR WORK OF OTHER TRADES RESULTING FROM LANDSCAPE CONSTRUCTION.

6. THE CONTRACTOR SHALL NOTIFY ALL NECESSARY UTILITY COMPANIES 72 HRS MINIMUM PRIOR TO DIGGING FOR FIELD VERIFICATION OF ALL UNDERGROUND UTILITIES, AND OTHER ELEMENTS, AND COORDINATE WITH THE DESIGN PROFESSIONAL PRIOR TO INITIATING OPERATIONS. THE CONTRACTOR SHALL AVOID DAMAGE TO ALL UTILITIES DURING THE COURSE OF WORK.

7. CONTRACTOR SHALL PROTECT ALL EXISTING PLANT MATERIALS INDICATED ON PLANS TO REMAIN. ALL PLANT MATERIAL INDICATED TO REMAIN THAT IS DAMAGED BY THE CONTRACTOR SHALL BE REPLACED BY THE CONTRACTOR AT NO ADDITIONAL COST TO THE OWNER WITH THE SAME SIZE, QUALITY, AND TYPE OF PLANT MATERIAL OR AS REQUIRED BY THE LOCAL REVIEWING AUTHORITY, WHICHEVER HAS A GREATER RECOMPENSE VALUE.

8. ANY PLANT MATERIAL WHICH DIES, TURNS BROWN OR DEFOLIATES (PRIOR TO DATE OF SUBSTANTIAL COMPLETION OF THE WORK) SHALL BE PROMPTLY REMOVED FROM THE SITE AND REPLACED WITH MATERIAL OF THE SAME SPECIES, QUANTITY, SIZE AND MEETING ALL THE PLANT LIST SPECIFICATIONS.

9. DESIGN PROFESSIONAL OR OWNER'S REPRESENTATIVE SHALL BE THE SOLE JUDGE OF THE QUALITY AND ACCEPTABILITY OF MATERIALS AND PLACEMENT.

10. PLANTS SHALL BE SPECIMEN QUALITY, WELL BRANCHED AND DENSELY FOLIATED WHEN IN LEAF. ALL PLANTS MUST BE HEALTHY, VIGOROUS MATERIAL, FREE OF DISEASES, INSECTS, EGGS, LARVAE, AND DEFECTS SUCH AS KNOTS, SUN-SCALD, INJURIES, ABRASIONS AND/OR DISFIGUREMENT.

11. HEIGHT AND SPREAD DIMENSIONS SPECIFIED REFER TO THE MAIN BODY OF THE PLANT AND NOT FROM BRANCH TIP TO TIP. IF A RANGE OF SIZE IS GIVEN, NO PLANT SHALL BE LESS THAN THE MINIMUM SIZE AND NOT LESS THAN 50 PERCENT OF THE PLANTS SHALL BE AS LARGE AS THE MAXIMUM SIZE SPECIFIED.

12. HARDWOOD TREES SHALL HAVE STRAIGHT TRUNKS WITH CENTRAL LEADERS, FULL HEADED, AND MEET ALL REQUIREMENTS SPECIFIED. DO NOT HANDLE PLANTS BY THE TRUNK.

13. PLACE PLANTS UPRIGHT AND TURNED SO THAT THE MOST ATTRACTIVE SIDE IS VIEWED.

14. AFTER BEING DUG AT THE NURSERY SOURCE, ALL TREES IN LEAF SHALL BE ACCLIMATED FOR TWO (2) WEEKS UNDER A MIST SYSTEM PRIOR TO INSTALLATION.

15. LEAVES: MUST BE OF MEDIUM FOLIAGE, ALL GOOD LEAVES, MAXIMUM OF 10% CHLOROSIS ALLOWED, WITH NO EXTREME SUCCULENCE.

16. IF DRAINAGE IS NOT SUFFICIENT NOTIFY PROJECT OWNER'S REPRESENTATIVE IN WRITING BEFORE INSTALLING THE PLANTS, OTHERWISE CONTRACTOR SHALL BE TOTALLY RESPONSIBLE FOR THE GUARANTEE AND LIVABILITY OF THE PLANT.

17. THE CONTRACTOR SHALL PROVIDE ALL NECESSARY SAFETY MEASURES DURING CONSTRUCTION OPERATIONS TO PROTECT THE PUBLIC ACCORDING TO ALL APPLICABLE CODES AND RECOGNIZED LOCAL PRACTICES

18. THE CONTRACTOR SHALL REPORT ANY DISCREPANCIES BETWEEN THE CONSTRUCTION DRAWINGS AND FIELD CONDITIONS TO THE DESIGN PROFESSIONAL PRIOR TO STARTING CONSTRUCTION. FOLLOW THE DESIGN PROFESSIONAL'S INSTRUCTIONS ON RESOLVING ANY DISCREPANCIES.

19. UNLESS OTHERWISE SPECIFIED DUE TO SOIL CONDITIONS, SET ROOT FLARE OF ROOTBALL LEVEL WITH SURROUNDING GRADE. ROOT SYSTEM SHALL BE AS SPECIFIED IN PLANT SCHEDULE:

    A. BALLED AND BURLAPPED: ROOTS MUST BE STURDILY ESTABLISHED IN BALL THAT HAS BEEN TIGHTLY WRAPPED AND SECURELY TIED WITH TWINE OR WIRE, OR PINNED. WHERE WIRE BASKETS ARE USED ON TREES OR SHRUBS, CUT BURLAP AND WIRE BACK TO ¼ THE BASE OF ROOTBALL AND REMOVE FROM PLANTING HOLE. REMOVE ALL STRAPS, WIRE STRAP HANGERS, ETC. FROM ROOTBALL. DO NOT ALLOW REMAINING WIRE TO PROTRUDE INTO MULCH OR TOPSOIL AREAS.

    B. CONTAINER GROWN: CONTRACTOR SHALL BE RESPONSIBLE FOR NOTIFYING DESIGN PROFESSIONAL OF ROOT BOUND SPECIMENS. REMOVE CONTAINER AND SCARIFY OR SHAVE ROOTBALL AS NEEDED TO REMEDIATE ROOT BOUND CONDITION. PULL SURFACE ROOTS AT TOP OF ROOTBALL OUT IN A DIRECTIONAL PATTERN TO DISCOURAGE CIRCLING ROOTS.

22. STAKING IS ONLY TO BE INSTALLED IN SPECIAL CIRCUMSTANCES AT THE DIRECTION OF THE DESIGN PROFESSIONAL. ANY STAKING MATERIAL MUST BE REMOVED AT THE END OF THE WARRANTY PERIOD.

PLANTING SOIL MIX NOTES:

1. THE LANDSCAPE CONTRACTOR SHALL FURNISH TOPSOIL; PLANTING SOIL MIX MUST BE APPROVED BY THE LANDSCAPE ARCHITECT PRIOR TO PLANTING OR ANY BACKFILLING.

2. THE LANDSCAPE CONTRACTOR SHALL SUPPLY ALL PLANTING SOIL MIX. TYPICAL PLANTING MIX SHALL BE USED TO AMEND EXISTING SOIL PER SOIL TEST ANALYSIS FOR DESIRED PLANTINGS. CONTRACTOR SHALL PROVIDE SOIL TEST LAB REPORT WITH FINDINGS AND RECOMMENDATIONS TO ENSURE HEALTHY, VIABLE PLANTS.

3. SOILS SHALL BE CLEAN AND FREE OF DEBRIS. UNACCEPTABLE MATERIALS WITHIN THE SOIL INCLUDE, BUT ARE NOT LIMITED TO:

    A. CONCRETE SLURRY, CEMENT, PLASTER, BUILDING DEBRIS, OILS, GASOLINE, AND OTHER EXTRANEOUS MATERIALS THAT ARE HARMFUL TO PLANT GROWTH.

    B. STONES, ROOTS, CLAY LUMPS AND POCKETS OF COARSE SAND THAT EXCEED A COMBINED MAXIMUM OF 8% DRY WEIGHT OF THE IMPORTED SOIL (IF APPLICABLE).

WATERING NOTES:

1. WATERING AFTER INSTALLATION AND WATER TRANSPORTATION IS THE SOLE RESPONSIBILITY OF THE CONTRACTOR.

2. USE OF TREE CAMEL, OOZE TUBES OR TREE GATOR BAGS FOR TREES ARE ACCEPTABLE.

3. INSTALLATION OF A PERMANENT IRRIGATION SYSTEM IS NOT PROPOSED. THE CONTRACTOR MAY CHOOSE TO INSTALL A TEMPORARY IRRIGATION SYSTEM IN ORDER TO ESTABLISH INSTALLED PLANT MATERIAL. SUBMIT A PLAN FOR A TEMPORARY SYSTEM TO THE OWNER'S REPRESENTATIVE FOR REVIEW AND APPROVAL PRIOR TO INSTALLATION. THE SYSTEM SHALL BE DESIGNED TO PROVIDE FULL AND COMPLETE COVERAGE TO ALL LANDSCAPED AREAS OF THE SITE INDICATED ON THE LANDSCAPE PLAN.

4. ALL MATERIALS USED IN THE DESIGN OF THE TEMPORARY SYSTEM, INCLUDING SPRINKLER HEADS, VALVES, VALVE BOXES, CONTROLLERS, PUMPS, BACKFLOW PREVENTORS, RAIN AND FREEZE SENSORS, DRIP EQUIPMENT, WIRE, ELECTRICAL CONNECTIONS, AND PVC PIPE AND FITTINGS, SHALL MEET MINIMUM INDUSTRY STANDARDS. MANUFACTURER AND MODEL MUST BE SPECIFIED.

5. THE CONTRACTOR IS RESPONSIBLE FOR REMOVING THE TEMPORARY SYSTEM AFTER SUBSTANTIAL COMPLETION IS OBTAINED.

6. IF PLANTING AREAS ARE NOT IRRIGATED OR IF IRRIGATION IS NOT OPERATING, HAND WATER ROOT BALLS (OR PLANT BEDS FOR GROUNDCOVERS) OF ALL PLANTS TO ASSURE THAT THE ROOTS HAVE ADEQUATE MOISTURE. TEST THE MOISTURE CONTENT IN EACH ROOTBALL TO DETERMINE WATER CONTENT. THE CONTRACTOR SHALL INSTALL ONE SET OF WATERING BAGS FOR EACH TREE TO BE MAINTAINED (AND NOT IRRIGATED) FOR TREE WATERING DURING THE WARRANTY PERIOD. WATERING BAGS SHALL BE REMOVED BETWEEN DECEMBER 1 AND MARCH 1.

MULCHING NOTES:

1. THE LANDSCAPE CONTRACTOR SHALL FURNISH TOPSOIL. TOPSOIL MUST BE APPROVED BY THE LANDSCAPE ARCHITECT.

2. MULCH TOP OF ROOT BALLS AND PLANTING BEDS, COVERING THE ENTIRE PLANTING BED AREA. PROVIDE THE FOLLOWING THICKNESS OF MULCH. TOP OF MULCH SHALL BE SMOOTH AND EVEN IN ALL DIRECTIONS.

3. TREE SHRUB AND GROUNDCOVER PLANTING AREAS: 3-INCH DEPTH CONTINUOUS FROM PLANT TO PLANT. DEPTH IS DEPTH AFTER SETTLING.

4. PERENNIAL PLANTING AREAS: 3-INCH DEPTH CONTINUOUS FROM PLANT TO PLANT. DEPTH IS DEPTH AFTER SETTLING.

5. IN NO CASE SHALL MULCH COME IN CONTACT WITH ANY PART OF TRUNK OR ROOT FLARE.

6. APPLY MULCH AFTER ALL PLANTS HAVE BEEN INSTALLED AND APPROVED.

7. CONTRACTOR SHALL NOT OVER-MULCH PLANTING BEDS WITH EXCESS MULCH. EXCESS MULCH SHALL BE REMOVED AND DISPOSED OF OFF-SITE.

8. LIFT ALL LEAVES, LOW HANGING STEMS AND OTHER GREEN PORTIONS OF PLANTS OUT OF THE MULCH IF COVERED.

WARRANTY NOTES:

1. THE CONTRACTOR SHALL COMPLETELY WARRANTY ALL PLANT MATERIAL AS INDICATED BEGINNING AT THE DATE OF SUBSTANTIAL COMPLETION. MAINTENANCE WORK SHALL BE PERFORMED UNTIL DATE OF FINAL ACCEPTANCE BY OWNER. THE CONTRACTOR SHALL PROMPTLY MAKE ALL REPLACEMENTS BEFORE OR AT THE END OF THE WARRANTY PERIOD WITHIN TWO GROWING PERIODS (AS DIRECTED BY THE OWNER).

2. INSTALLER AGREES TO REPAIR OR REPLACE PLANTINGS AND ACCESSORIES THAT FAIL IN MATERIALS, WORKMANSHIP, OR GROWTH WITHIN SPECIFIED WARRANTY PERIOD.

3. WARRANTY PERIOD FOR TREES AND SHRUBS: ONE-YEAR FROM DATE OF SUBSTANTIAL COMPLETION.

4. WARRANTY PERIOD FOR VINES AND PERENNIALS: ONE-YEAR FROM DATE OF SUBSTANTIAL COMPLETION.

5. PLANTS SHALL BE HEALTHY, FREE OF PESTS AND DISEASE, AND IN FLOURISHING CONDITION AT THE END OF THE WARRANTY PERIOD. PLANTS SHALL BE FREE OF DEAD AND DYING BRANCHES AND BRANCH TIPS, AND SHALL BEAR FOLIAGE OF NORMAL DENSITY, SIZE, AND COLOR FOR THE SPECIES.

6. PLANTS THAT ARE DEAD, DISEASED, INSECT INFESTED, OR NOT IN A VIGOROUS, THRIVING CONDITION, AS DETERMINED BY THE DESIGN PROFESSIONAL DURING OR AT THE END OF THE WARRANTY PERIOD, SHALL BE DEEMED DEFECTIVE. PLANTS THAT HAVE HAD MORE THAN 25% OF THEIR BRANCHES DIE OR REMOVED SHALL BE REPLACED. PLANTS THAT HAVE HAD A MAJOR BRANCH OR SIDE OF THE PLANT REMOVED SUCH THAT CURRENT OR FUTURE AESTHETIC APPEAL OR STRUCTURAL INTEGRITY OF THE PLANT, AS DETERMINED BY THE DESIGN PROFESSIONAL, IS DIMINISHED SHALL BE CONSIDERED DEFECTIVE. PLANT MATERIAL DETERMINED TO BE DEFECTIVE SHALL BE REPLACED WITHOUT COST TO THE OWNER.

7. REMOVE DEFECTIVE OR DEAD PLANTS IMMEDIATELY. REPLACE AS SOON AS WEATHER CONDITIONS PERMIT AND WITHIN ONE OF THE SPECIFIED PLANTING PERIODS.

8. REPLACEMENTS SHALL CLOSELY MATCH ADJACENT SPECIMENS OF THE SAME SPECIES. REPLACEMENTS SHALL BE SUBJECT TO ALL REQUIREMENTS STATED IN THIS SPECIFICATION. MAKE ALL NECESSARY REPAIRS DUE TO PLANT REPLACEMENTS. SUCH REPAIRS SHALL BE DONE AT NO EXTRA COST TO THE OWNER.

9. THE WARRANTY OF ALL REPLACEMENT PLANTS SHALL EXTEND FOR AN ADDITIONAL ONE-YEAR PERIOD FROM THE DATE OF THEIR ACCEPTANCE AFTER REPLACEMENT. IN THE EVENT THAT A REPLACEMENT PLANT IS NOT ACCEPTABLE DURING OR AT THE END OF THE EXTENDED WARRANTY PERIOD, THE OWNER MAY ELECT ONE MORE REPLACEMENT ITEM OR CREDIT FOR EACH ITEM. THESE REPLACEMENT ITEMS ARE NOT PROTECTED UNDER A WARRANTY PERIOD.

10. AT THE END OF THE WARRANTY PERIOD, AND NO LESS THAN FIVE DAYS PRIOR TO FINAL INSPECTION, TREE TIES AND GUYING SHALL BE REMOVED FROM THE SITE. ALL TREES THAT HAVE LEANED SHALL BE STRAIGHTENED

CITY OF SANDY SPRINGS NOTES:

1. TREES PLANTED TO MEET CANOPY COVER STANDARDS MUST BE MAINTAINED IN HEALTHY CONDITION FOR A MIN. OF THREE (3) FULL GROWING SEASONS.

2. REQUIRED TREES SHALL BE PLANTED BETWEEN MID-OCTOBER AND THE END OF FEBRUARY. THE SURVIVAL OF TREES PLANTED OUTSIDE OF THAT TIME PERIOD SHALL BE GUARANTEED BY PLACING FUNDS IN ESCROW WITH THE DEPARMENT OF COMMUNITY DEVELOPMENT. FUNDS MAY BE PLACED IN ESCROW IN LIEU OF PLANTING PENDING THE DESIRABLE PLANTING SEASON. THE TOTAL AMOUNT DEPOSITED SHALL INCLUDE THE PURCHASE, TRANSPORT, AND INSTALLATION OF PLANT MATERIALS.

3. COMPLETE POST-CONSTRUCTION TREE MAINTENANCE, INCLUDING PRUNING, MULCHING, FERTILIZATION, IRRIGATION, AND SOIL AERATION WHERE NECESSARY.

4. APPLY AT LEAST 1 INCH OF WATER PER WEEK BY DEEP WATERING IN THE ABSENCE OF ADEQUATE RAINFALL.

5. FERTILIZE TREES WITH PHOSPHOROUS, POTASSIUM, CALCIUM, MAGNESIUM, AND OTHER MACRO-AND MICO-NUTRIENTS AS INDICATED BY A SOIL TEST, BUT WAIT AT LEAST ONE YEAR TO APPLY ANY NITROGEN. FERTILIZE LIGHTLY WITH NITROGEN AFTER 1 YEAR.

6. PRE-PLANTING CONSIDERATIONS

    - ONLY HEALTHY TREES WITH A WELL-DEVELOPED ROOT SYSTEM AND A WELL FORMED TOP, CHARACTERISTIC OF THE SPECIES, SHALL BE PLANTED. STANDARDS FOR SELECTING QUALITY STOCK MAY BE PROVIDED BY THE CITY ARBORIST.
    - TREES SELECTED FOR PLANTING MUST BE COMPATIBLE WITH THE SPECIFIC SITE CONDITIONS. A SITE SPECIFIC TREE LIST IS PROVIDED IN SUBSECTION M, FURTHER BELOW.
    - MAKE CERTAIN THERE IS ADEQUATE PLANTING AREA AND SOIL VOLUME FOR THE TREE AND THE POTENTIAL SIZE OF THE TREE IS APPROPRIATE FOR THE SITE, INCLUDING POTENTIAL CONFLICTS WITH SIGHT DISTANCE, TRAFFIC AND PEDESTRIAN CLEARANCE, AND OVERHEAD UTILITIES. (UTILITIES PROTECTION CENTER 1-800- 282-7411).
    - CONTRACTORS MUST CALL (811) FOR UTILITY LOCATION OF UNDERGROUND UTILITIES PRIOR TO DIGGING.
    - DECIDUOUS AND EVERGREEN TREES SHALL BE PLANTED BETWEEN THE END OF OCTOBER AND THE END OF FEBRUARY.

8. SOIL ENVIRONMENT

    A. ADEQUATE SOIL VOLUME SHALL BE MAINTAINED THROUGH THE LIFE TIME OF THE TREE. IN NORMAL SURFACE PLANTING ENVIRONMENT WITH AVERAGE SOIL DEPTHS GREATER THAN OR EQUAL TO 3 FEET, SOIL VOLUME CALCULATIONS CAN BE BASED ON SURFACE AREA AS FOLLOWS:

    - SMALL TREE= 25 SF
    - MEDIUM TREE= 150 SF
    - LARGE TREE= 300 SF

    B. SOIL ORGANIC MATTER CONTENT SHALL BE MAINTAINED AT 5 PERCENT VOLUME.

9. FERTILIZATION

    A. NEWLY PLANTED, DROUGHT STRESSED OR SEVERELY DAMAGED OR INJURED TREES SHALL NOT BE FERTILIZED.

    B. FERTILIZER SHALL BE APPLIED WHEN ROOTS ARE ACTIVELY GROWING. THE BEST TIMES ARE LATE WINTER, EARLY SPRING THROUGH EARLY SUMMER.

    C. NITROGEN, PHOSPHOROUS, AND POTASSIUM (NKP) IN A RATIO OF 3:1:1 IS MOST DESIRABLE.

    D. SLOW RELEASE NITROGEN SHALL BE APPLIED AT A RATE OF 2 TO 4 POUNDS (OF ELEMENTAL NITROGEN) PER 1,000 SQUARE FEET OF ROOTING AREA.

    E. FERTILIZER SHALL BE APPLIED WITHIN THE ENTIRE ROOT ZONE OF TREES. SUB-SURFACE APPLICATIONS TO A DEPTH OF 4 TO 12 INCHES ARE IDEAL.

    F. THE USE OF TRUNK FERTILIZER INJECTIONS OR IMPLANTS IS NOT RECOMMENDED.

10. IRRIGATION

    A. IN THE ABSENCE OF ADEQUATE RAINFALL, TREES SHALL BE IRRIGATED AT THE RATE OF 1 INCH OF WATER EVERY 5-7 DAYS. REFER TO APPROXIMATE WATERING TIME CHART WITHIN THE SANDY SPRINGS TECHNICAL MANUAL FOR APPROXIMATE WATER APPLICATION TIMES.

11. PLANTING PROCEDURES

    A. PLANTING HOLES SHALL BE NO LESS THAN TWO (2) TIMES THE WIDTH OF THE ROOT BALL OR BARE ROOTS OF THE TREE BEING PLANTED. A PLANTING HOLE 3 TO 5 TIMES THE WIDTH OF THE ROOT BALL IS RECOM- MENDED. FIGURE 5 IS THE TREE PLANTING STANDARD DETAIL.

    B. TREES SHALL NOT BE PLANTED DEEPER THAN THEY WERE IN THEIR FORMER LOCATION OR CONTAINER, AND SHALL BE 1-4" HIGHER THAN THE SURROUNDING FINISH GRADE.

    C. SPADE COMPACTED BOTTOM AND SIDES OF THE PLANTING HOLE SHALL BE ROUGHED OR SCARIFIED TO ALLOW THE PENETRATION OF DEVELOPING ROOTS.

    D. WATER DRAINAGE FROM THE BOTTOM OF THE PLANTING HOLE ESSENTIAL FOR ROOT ESTABLISHMENT.

    E. AVOID THE APPLICATION OF SOIL AMENDMENTS OR FERTILIZER AT THE TIME OF PLANTING.

    F. ALL PLANTS MUST BE WATERED TO SATURATION IMMEDIATELY UPON PLANTING. WHEN PLANTING TREES, IT IS RECOMMENDED THAT TREES BE SET AND THE PIT BACKFILLED HALF WAY, THEN SOAKED TO VERIFY GOOD DRAINAGE, THEN PLANTING COMPLETED, AND WATERED AGAIN TO SATURATION.

PERMIT SET

SANDY SPRINGS
GEORGIA

GEORGIA REGISTERED LANDSCAPE ARCHITECT No. 1339 ROBERT BRADLEY JONES
GSWCC: #31792
10/21/2019 SEAL

MARK	DESCRIPTION	DATE	APPR.
0	BID SET	2019.10.16	

DESIGNED BY: PBT | DATE: OCTOBER 16, 2019
DWN BY: PBT | CKD BY: RBJ | SOLICITATION NO.: -
SUBMITTED BY: PBT | CONTRACT NO.: -
FILE NUMBER: -
FILE NAME: L-501.dwg | PLOT DATE: 10/21/2019
SIZE: 22" x 34" | PLOT SCALE: 1:1

CITY OF SANDY SPRINGS
1 GALAMBOS WAY
SANDY SPRINGS, GA 30328

POND
3500 Parkway Lane
Peachtree Corners, GA
Suite 500 30092
Phone 678.336.7740
Fax 678.336.7744
POND PROJECT No.1190708

HERITAGE PARK IMPROVEMENTS

LANDSCAPE NOTES

SHEET IDENTIFICATION NUMBER
L-501

FILE PATH: \\ACP3SERVER\RESOURCES\PROJECTS\FY19\1190708\04.CAD_BIM\04.02.CAD\L-501.DWG PLOTTED BY: JONES, BRAD

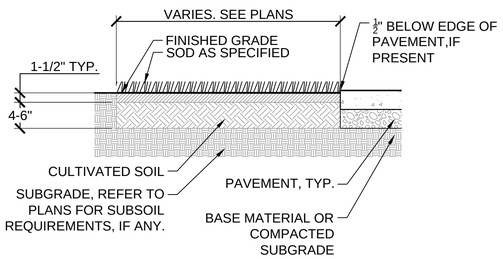

SODDING PROCEDURE:

1. THE GENERAL CONTRACTOR WILL PROVIDE GRADES TO +/-TWO TENTHS (0.20) OF A FOOT OF PROPOSED GRADES.
2. REFER TO DRAWINGS AND SPECIFICATIONS FOR ANY SPECIAL SUBSOILING REQUIREMENTS. AT A MINIMUM, BREAK THROUGH AND REMOVE ALL SUBGRADE SURFACE 'HARDPAN' AND DEBRIS TO ALLOW PERCOLATION AND POSITIVE DRAINAGE.
3. ADD ADDITIVES, SUCH AS TOPSOIL, SAND OR COMPOST (PER SOIL TEST ANALYSIS) AND ROTOTILL INTO SUBGRADE. CULTIVATE ENTIRE AREA TO A DEPTH OF 4-6". HANDRAKE SMOOTH.
4. CULTIVATED SOIL MAY CONSIST OF STOCKPILED TOPSOIL, FREE OF DELETERIOUS MATERIAL.
5. IF EXCESSIVELY DRY, LIGHTLY WATER AREA TO BE SODDED PRIOR TO LAYING SOD.
6. LAY & ROLL SOD. WATER THOROUGHLY.

C1 SODDING

SCALE: N.T.S.

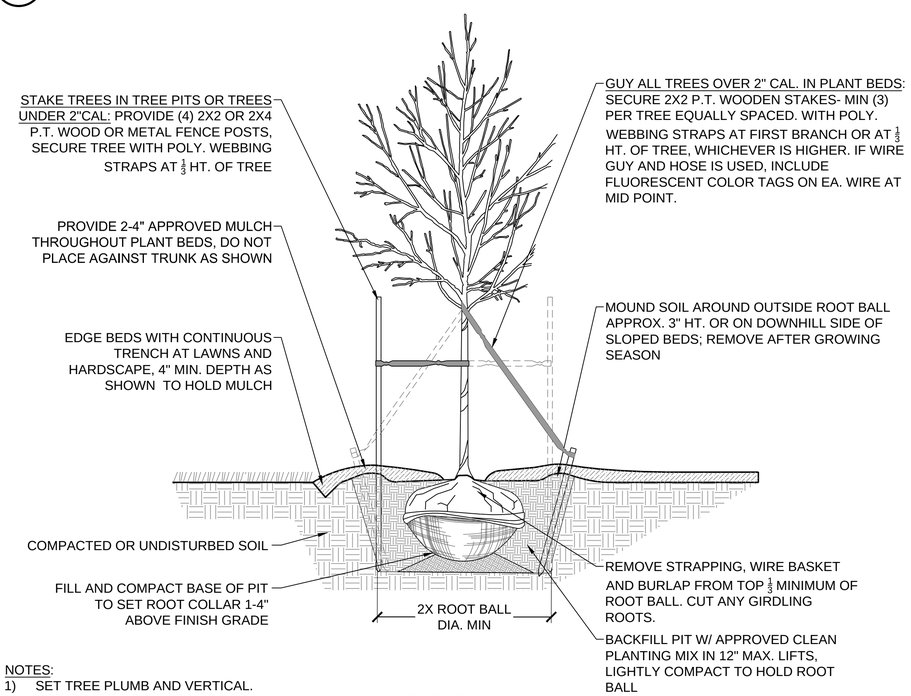

NOTES:

1) SET TREE PLUMB AND VERTICAL.
2) ROTATE TREE TO ALIGN AS GROWN IN FIELD: NORTH FACE TO NORTH.
3) PRUNE DEAD, DAMAGED AND CROSSING BRANCHES. ELEVATE BRANCHES AS PER CITY STANDARDS WHERE APPLICABLE. DO NOT CUT BRANCH TIPS OR CENTRAL LEADER.
4) REMOVE ALL STAKES AND GUYS AFTER 12 MONTHS.

A1 TREE PLANTING - SANDY SPRINGS STANDARD DETAIL

SCALE: N.T.S.

Figure 3 - Tunneling for Underground Utilities

Use tunneling for underground utilities such as cable, electric, and natural gas instead of cutting an open trench. This method will help preserve existing trees or smaller tree save areas.

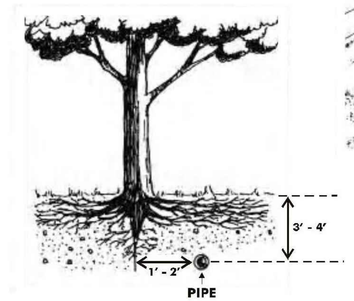

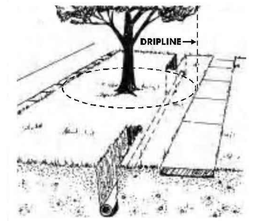

Why Tunneling Saves Trees

Trenching near a tree can kill as much as 40 to 50 percent of the tree's roots. This will almost certainly lead to stress, poor health, lack of firmness against wind, or outright death. A tunnel in the same place will do virtually no damage to the tree.

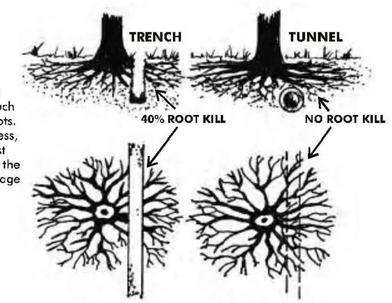

A3 TUNNELING FOR UNDERGROUND UTILITIES

SCALE: N.T.S.

PLANT SCHEDULE

TREES	COMMON NAME	BOTANICAL NAME	CONT
2	CAROLINA SILVERBELL	HALESIA CAROLINA	6'-7' HT

SHRUBS	COMMON NAME	BOTANICAL NAME	CONT
16	EVERGREEN CLEMATIS	CLEMATIS ARMANDII	1G
18	CINNAMON GIRL DISTYLIUM	DISTYLIUM `CINNAMON GIRL` `PIIDIST-V`	3G
25	DWARF FOTHERGILLA	FOTHERGILLA GARDENII	3G
9	LIMELIGHT HYDRANGEA	HYDRANGEA PANICULATA `LIMELIGHT`	7G

SHRUB AREAS	QTY	COMMON NAME	BOTANICAL NAME	CONT	SPACING
	21	SWITCH GRASS	PANICUM VIRGATUM `CAPE BREEZE`	1G	24" o.c.
	43	SOUTHERN SHIELD FERN	THELYPTERIS KUNTHII	1G	36" o.c.

SOD/SEED	QTY	COMMON NAME	BOTANICAL NAME	CONT	SPACING
	1,326 SF	BERMUDA GRASS	CYNODON DACTYLON `TIF 419`	SOD	

NOTE:

1. QUANTITIES TO BE VERIFIED BY CONTRACTOR FOR BIDDING PURPOSES.
2. PLANT MATERIAL TO BE SAVED AND RELOCATED ON-SITE NOT SHOWN. COORDINATE WITH DESIGN PROFESSIONAL FOR RELOCATION AREAS.

A3 PLANT SCHEDULE

SCALE: N.T.S.

PERMIT SET

FILE PATH: \\ACP3SERVER\RESOURCES\PROJECTS\FY19\119070804.CAD_BIM\04.02.CADL-501.DWG PLOTTED BY: JONES, BRAD

SANDY SPRINGS GEORGIA

GEORGIA REGISTERED No. 1339 LANDSCAPE ARCHITECT ROBERT BRADLEY JONES

GSWCC: #31792
10/21/2019 SEAL

MARK	DESCRIPTION	DATE	APPR.
0	BID SET	2019.10.16	

DESIGNED BY: PBT
DWN BY: PBT
CKD BY: RBJ
SUBMITTED BY: PBT
DATE: OCTOBER 16, 2019
SOLICITATION NO.: -
CONTRACT NO.: -
FILE NUMBER: -
FILE NAME: L-502.dwg
SIZE: 22" x 34"
PLOT SCALE: 1:1
PLOT DATE: 10/21/2019

CITY OF SANDY SPRINGS
1 GALAMBOS WAY
SANDY SPRINGS, GA 30328

POND
3500 Parkway Lane
Peachtree Corners, GA
30092-2688, USA
Phone 678.336.7740
Fax 678.336.7744
POND PROJECT No. 119070.08

HERITAGE PARK IMPROVEMENTS

LANDSCAPE NOTES & DETAILS

SHEET IDENTIFICATION NUMBER
L-502

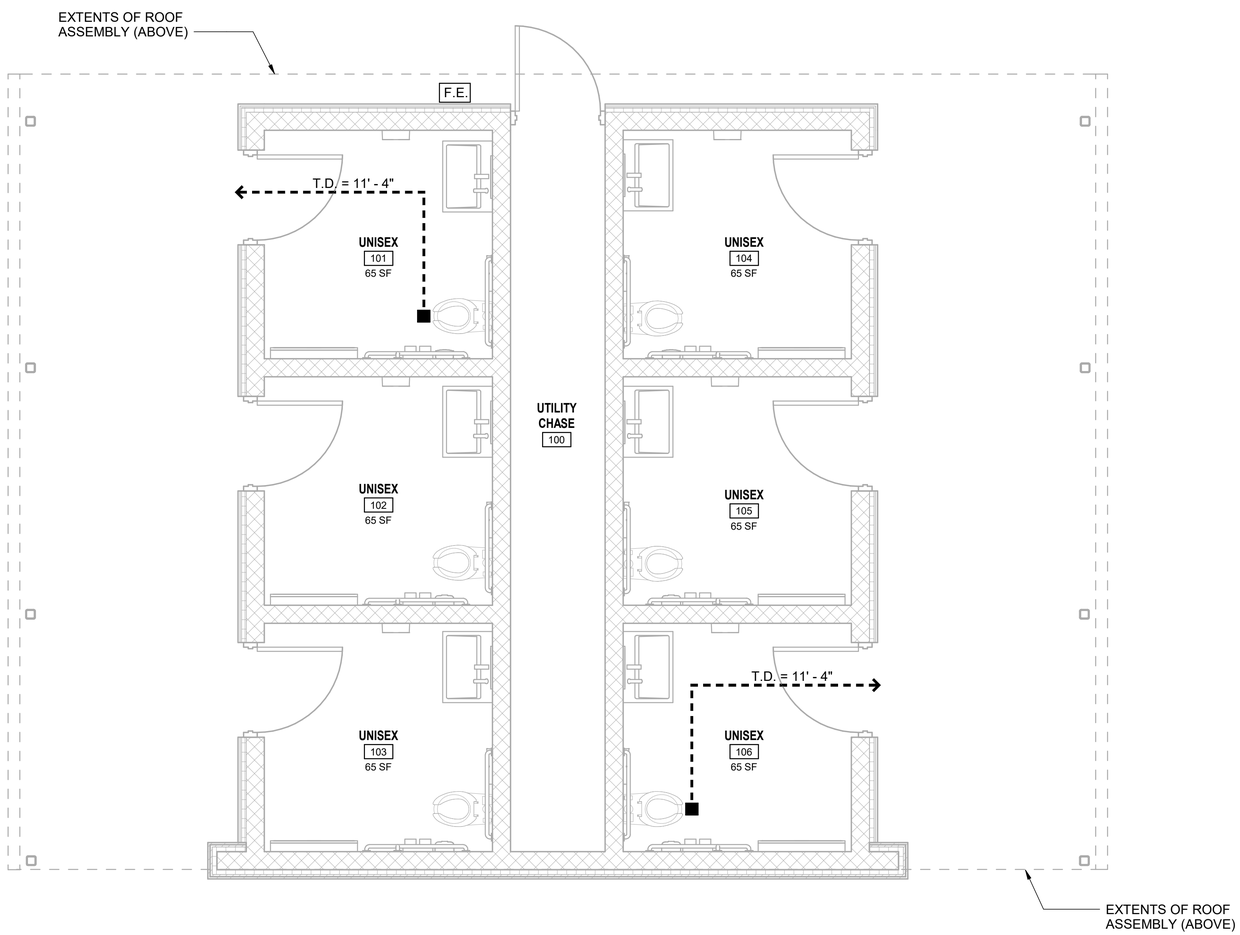

A1 LIFE SAFETY PLAN

SCALE: 3/8" = 1'-0"

BUILDING CODE SUMMARY:

PROJECT NAME: SANDY SPRINGS HERITAGE PARK RESTROOM & UTILITY BUILDING

BUILDING CODE STANDARD:
INTERNATIONAL BUILDING CODE, 2012 EDITION, GA AMENDMENTS (2014)(2015)(2017)(2018)

INTERNATIONAL FIRE CODE, 2012 EDITION, GA AMENDMENTS (2014)

INTERNATIONAL PLUMBING CODE, 2012 EDITION, GA AMENDMENTS (2014)(2015)

INTERNATIONAL MECHANICAL CODE, 2012 EDITION, GA AMENDMENTS (2015)

NATIONAL ELECTRICAL CODE, 2017 EDITION, W/ NO GA AMENDMENTS (2018)

INTERNATIONAL ENERGY CODE, 2009 EDITION, W/ GA SUPPLEMENTS AND AMENDMENTS (2011)(2012)

2012 NFPA 101 - LIFE SAFETY CODE W/ STATE AMENDAMENTS.

BUILDING OCCUPANCY TYPE:
RESTROOM FACILITY = UTILITY GROUP (U)

CONSTRUCTION TYPE:
RESTROOM FACILITY = TYPE IIB : NON-COMBUSTIBLE, NON FIRE-RESISTANCE RATED

REQUIRED PROTECTION:
RESTROOM FACILITY = NON-SPRINKLERED, UNPROTECTED CONSTRUCTION

OCCUPANT LOAD:
RESTROOM FACILITY IS CONSIDERED UNOCCUPIED.

PLUMBING FIXTURE COUNT:
PLUMBING FIXTURE COUNT PROVIDED PER OWNER DIRECTIVE. STALLS WILL BE SERVICING A PARK AREA THAT CURRENTLY HAS NO RESTROOMS. FOR CONCERTS THE TOTAL REQUIRED PLUMBING FIXTURE COUNT WILL BE DETERMINED ON A PER PERMIT BASIS FOR EACH EVENT. VENDOR IS TO PROVIDE PORTA-JOHNS AS NEEDED TO MEET THE MINIMUM NUMBER OF REQUIRED PLUMBING FIXTURES PER THE CACULATED ASSEMBLY OCCUPANCY OF THE OPEN LAWNED THEATER.

GENERAL LIFE SAFETY SHEET NOTES:

1. DEVICES HAVE BEEN SHOWN; BUT THE CONTRACTOR SHALL PROVIDE THE INSTALLATION OF ALL LIFE SAFETY DEVICES INDICATED ON THE ENGINEERING DRAWINGS.

LIFE SAFETY PLAN LEGEND

FULL HEIGHT WALLS (NO RATING)

45'-0" TRAVEL DISTANCE

STARTING POINT FOR TRAVEL DISTANCE

FE BRACKET - MOUNTED FIRE EXTINGUISHER: 10LB. A:BC DRY - CHEMICAL TYPE

36" 100/100 EGRESS CLEAR WIDTH CAPACITY/NO. OF OCCUPANTS

2 0 2 4 6

SCALE: 3/8" = 1'-0"

SANDY SPRINGS GEORGIA

STATE OF GEORGIA MICHAEL LEE KATZIN 10/11/2019 GEORGIA CERT. NO. 5MR0001 REGISTERED ARCHITECT

SEAL

MARK	DESCRIPTION	DATE
1	BID SET / CITY COMMENTS	2019.10.11
0	LDP SUBMITTAL	2019.09.24

ISSUE DATE: 10/11/19
SOLICITATION NO.: SOL-XX-X-XXX
CONTRACT NO.: CONTRACT NUMBER
FILE NUMBER: XXX-XXXX

DESIGNED BY: RJL
DWN BY: RJL
CKD BY: CLS
SUBMITTED BY:
FILE NAME:
SIZE: 22"X34"
PLOT SCALE:
PLOT DATE: 10/11/19

CITY OF SANDY SPRINGS:
SANDY SPRINGS CITY HALL
1 GALAMBOS WAY
SANDY SPRINGS, GA 30328

POND
3500 Parkway Lane
Peachtree Corners, GA
30092 Suite 550
Phone (678) 336-7740
Fax (678) 336-7744

JOB NO. 1190708

HERITAGE PARK IMPROVEMENTS

LIFE SAFETY PLAN & BUILDING CODE

SHEET IDENTIFICATION NUMBER
G-101

10/10/2019 4:59:32 PM C:\Users\locaminir\Documents\1190708_SS_Heritage_Park_ARCH_v19_LocaminiR.rvt

Copyright © 2019 by Pond & Company. All rights reserved. No copying or duplication of these documents is allowed without the express written agreement of Pond & Company.

ARCHITECTURAL ABBREVIATIONS

A.F.	ACCESS FLOORING
A.F.F.	ABOVE FINISHED FLOOR
ACC. DR.	ACCESS DOOR / PANEL
ADAAG	AMERICAN WITH DISABILITIES ACCESSIBILITY GUIDELINES
ACCESS.	ACCESSORIES
ADJ.	ADJUST/ ADJUSTABLE
ACOUST.	ACOUSTICAL
A.B.	ANCHOR BOLT
ACT	ACOUSTICAL CEILING TILE
ANOD.	ANODIZED
A.C.	AIR CONDITIONING
AL / ALUM.	ALUMINUM
&	AND
L	ANGLE
APP.	APPROVED
APPROX.	APPROXIMATE
ARCH.	ARCHITECTURAL
@	AT
AT / FP	ANTI TERRORISM / FORCE PROTECTION
AVG.	AVERAGE
A.W.I.	ARCHITECTURAL WOODWORK INSTITUTE
B.H.M.I.	BUILDER'S HARDWARE MANUFACTURER'S ASSOCIATION, INC.
BM.	BEAM
BLKG.	BLOCKING
BD.	BOARD
BTM.	BOTTOM
BLDG.	BUILDING
B.U.R.	BUILT-UP ROOFING
CFCI	CONTRACTOR FURNISHED CONTRACTOR INSTALLED
CH.	CHANNEL
CPT.	CARPET
CLG.	CEILING
CLG. HT.	CEILING HEIGHT
CTR.	CENTER
℄	CENTER LINE
C. TO C.	CENTER TO CENTER
C.T.	CERAMIC TILE
CLR.	CLEAR
C.O.	CLEANOUT
CLOS.	CLOSET
CO.	COMPANY
COL.	COLUMN
CONC.	CONCRETE
CORR.	CORRIDOR
COTR	CONTRACTING OFFICER'S TECHNICAL REPRESENTATIVE
CMU	CONCRETE MASONRY UNIT
CONF.	CONFERENCE
CONST.	CONSTRUCTION
CONT.	CONTINUOUS
CONTR.	CONTRACTOR
C.J.	CONTROL JOINT
C.Y.	CUBIC YARD
DET.	DETAIL
DIA.	DIAMETER
DIM.	DIMENSION
DISP.	DISPENSER
DR.	DOOR
DN.	DOWN
D.S.	DOWNSPOUT
DESC.	DESCRIPTION
DWG.	DRAWING
EA.	EACH
ELEC.	ELECTRICAL OR ELECTRIC
EL.	ELEVATION
E.W.C.	ELECTRIC WATER COOLER
E.R.D.	EMERGENCY ROOF DRAIN
E.P.	EPOXY PAINT
ENGR.	ENGINEER
EQUIP.	EQUIPMENT
EQ.	EQUAL
EXIST.	EXISTING
EXP.	EXPANSION / EXPOSED
E.J. (EXP. JT.)	EXPANSION JOINT
EXP. TO STRUCT.	EXPOSED TO STRUCTURE
EXT.	EXTERIOR
ETD	ESTIMATED TRAVEL DISTANCE
FAC.	FACTORY
FDC	FIRE DEPARTMENT CONNECTION
FT.	FEET
F.E.	FIRE EXTINGUISHER
F.E.C.	FIRE EXTINGUISHER CABINET
F.H.C.	FIRE HOSE CABINET
FIN.	FINISH
F.P.	FLAT PAINT
F.F.	FINISHED FLOOR
FLR.	FLOOR
F.D.	FLOOR DRAIN
FLUOR.	FLUORESCENT
F.O.G.	FACE OF GIRT
FTG.	FOOTING
FDN.	FOUNDATION
FV.	FIELD VERIFY

GA.	GAGE OR GAUGE
GALV.	GALVANIZED
G.B.F.	GYPSUM BOARD FURRING
GFCI	GOVERNMENT FURNISHED CONTRACTOR INSTALLED
GFGI	GOVERNMENT FURNISHED GOVERNMENT INSTALLED
G.L.	GIRT LINE
G.P.	GLOSSY PAINT
GL.	GLASS
GOVT.	GOVERNMENT
GYP.	GYPSUM
GYP. BD. (GWB)	GYPSUM BOARD
HKS	HOOKS
HR.	HANDRAIL
HDW.	HARDWARE
HGT.	HEIGHT
H.	HIGH
H.P.	HIGH POINT
H.M.	HOLLOW METAL
HORIZ.	HORIZONTAL
HB	HOSE BIBB
H.V.A.C.	HEATING VENTILATION & AIR CONDITIONING
IN.	INCH
I.D.	INSIDE DIAMETER
INSUL.	INSULATION
INT.	INTERIOR
JAN.	JANITOR
J.C.	JANITOR'S CLOSET
JT.	JOINT
JST.	JOIST
K.P.	KICK PLATE
LAM.	LAMINATE
LDG.	LANDING
LAV.	LAVATORY
L.H.	LEFT HAND
LHR	LEFT HAND REVERSE
LT.	LIGHT
LTG.	LIGHTING
LONG.	LONGITUDINAL
LVR.	LOUVER
L.P.	LOW POINT
MAS.	MASONRY
M.O.	MASONRY OPENING
MGR.	MANAGER
MANUF.	MANUFACTURER
MATL.	MATERIAL
MAX.	MAXIMUM
MECH.	MECHANICAL
MTL.	METAL
M.W.P.	METAL WALL PANEL
MIN.	MINIMUM
MISC.	MISCELLANEOUS
N.I.C.	NOT IN CONTRACT
NO. (#)	NUMBER
NTS	NOT TO SCALE
NFPA	NATIONAL FIRE PROTECTION ASSOCIATION
O.C.	ON CENTER
OFCI	OWNER FURNISHED CONTRACTOR INSTALLED
OFGI	OWNER FURNISHED GOVERNMENT INSTALLED
O.H.	OPPOSITE HAND
OPNG.	OPENING
O.W.	OPEN WEB
OPP.	OPPOSITE
O.D.	OUTSIDE DIAMETER
OSHA	OCCUPATIONAL SAFETY AND HEALTH ACT
OVHD	OVERHEAD
PDU	POWER DISTRIBUTION UNIT
PT	PAINT
PR.	PAIR
PNL.	PANEL
PART.	PARTITION
PLAS.	PLASTER OR PLASTIC
PL	PLATE
PLYWD.	PLYWOOD
LBS. OR #	POUNDS
PSF	POUNDS / SQUARE FOOT
PSI	POUNDS / SQUARE INCH
P.M.J.F.	PRE-MOLDED JOINT FILLER
PRE-FAB.	PREFABRICATED
Q.T.	QUARRY TILE

RAF	RAISED ACCESS FLOOR
RECEP.	RECEPTIONIST
REF.	REFERENCE
REINF.	REINFORCEMENT
REQ'D.	REQUIRED
REV.	REVISIONS / REVISED
R.D.	ROOF DRAIN
RH	RIGHT HAND
RHR	RIGHT HAND REVERSE
RM.	ROOM
R.O.	ROUGH OPENING
RB	RUBBER BASE
SC	SEALED CONCRETE
SCW	SOLID CORE WOOD
SCHED.	SCHEDULE
SECT.	SECTION
S.G.P.	SEMI-GLOSS PAINT
SSK	SERVICE SINK
SHT. MET.	SHEET METAL
SIM.	SIMILAR
STC	SOUND TRANSMISSION CLASS
SPEC(S)	SPECIFICATION
SFRM	SPRAYED FIRE RESISTIVE MATERIAL
SQ.	SQUARE
ST.	STAIN
S.S.	STAINLESS STEEL
STD.	STANDARD
STL.	STEEL
STOR.	STORAGE
STRUCT.	STRUCTURAL
SUSP.	SUSPENDED
TOIL. / TLT	TOILET
TEL.	TELEPHONE
THK.	THICK
T'HOLD	THRESHOLD
TG	TEMPERED GLASS
T/	TOP OF
TOB	TOP OF BEAM
TOC	TOP OF CONCRETE
T/C	TOP OF CURB
TOS	TOP OF STEEL
T/W	TOP OF WALL
TU	TOUCH-UP
TYP.	TYPICAL
U.L.	UNDERWRITERS LABORATORIES
UNFIN	UNFINISHED
U.N.O.	UNLESS NOTED OTHERWISE
VERT.	VERTICAL
VEST.	VESTIBULE
VCT	VINYL COMPOSITION TILE
VCB	VINYL COVE BASE
V.T.R.	VENT THRU ROOF
W.	WIDTH
W/	WITH
W.C.	WATER CLOSET
WCO	WALL CLEAN OUT
WD.	WOOD
WDW.	WINDOW
W.M.P.	WIRE MESH PARTITION
W/O	WITHOUT
W.R.G.B.	WATER RESISTANT GYPSUM BOARD
W.S.	WEATHERSTRIPPING
W.R.O.	WINDOW ROUGH OPENING
YD.	YARD

GENERAL NOTES:

1. THE DRAWINGS INDICATE THE GENERAL EXTENT OF WORK. THE DRAWINGS ARE NOT INTENDED TO INDICATE OR DESCRIBE ALL WORK REQUIRED FOR THE FULL PERFORMANCE AND COMPLETION OF THE REQUIREMENTS OF THE CONTRACT DOCUMENTS.
2. THE ENUMERATION OF PARTICULAR ITEMS OF WORK IN ONE PORTION OF THE CONTRACT DOCUMENTS SHALL NOT BE CONSTRUED TO EXCLUDE OTHER ITEMS NECESSARY OR IMPLIED THEREFROM.
3. THE CONTRACTOR IS RESPONSIBLE FOR THE COORDINATION OF ALL PARTS OF THE WORK SO THAT NO WORK SHALL BE LEFT IN AN UNFINISHED OR INCOMPLETE CONDITION.
4. ALL WORK SHALL CONFORM TO APPLICABLE INDUSTRY AND MANUFACTURER'S PUBLISHED STANDARDS FOR QUALITY OF MATERIALS AND WORKMANSHIP, AS WELL AS, ALL REQUIREMENTS IN THESE DRAWINGS AND SPECIFICATIONS. ANY CONFLICTING REQUIREMENTS OF THE SOURCES LISTED ABOVE SHALL BE BROUGHT TO THE **ARCHITECT'S** ATTENTION PRIOR TO PROCEEDING WITH THE WORK.
5. THE CONTRACTOR SHALL PROTECT ANY EXISTING, IN-PLACE, AND NEW WORK.
6. ALL WORK NOTED "N.I.C." IS NOT MEANT TO BE PART OF THE CONSTRUCTION SCOPE OF WORK AGREEMENT.
7. THE CONTRACTOR SHALL PAY FOR AND COORDINATE THE REMOVAL AND LEGAL DISPOSAL OF MATERIALS AND RUBBISH.
8. ONCE ON SITE, THE CONTRACTOR SHALL VERIFY ALL DIMENSIONS AND SHALL VERIFY ALL NEW AND EXISTING CONDITIONS, SHOWN ON THESE DRAWINGS. THE CONTRACTOR SHALL NOTIFY THE **ARCHITECT** IN WRITING OF ANY DIFFERING CONDITIONS BEFORE COMMENCEMENT OF WORK.
9. DO NOT SCALE DRAWINGS; DIMENSIONS GOVERN, LARGE SCALE DETAILS GOVERN OVER SMALL SCALE DETAILS. THE CONTRACTOR SHALL NOTIFY THE **ARCHITECT** IN WRITING OF ANY DIFFERING CONDITIONS BEFORE COMMENCEMENT OF WORK.
10. UNLESS NOTED OTHERWISE, ALL GYPSUM BOARD SURFACES ARE TO RECEIVE ONE PRIMER COAT AND TWO COATS OF PAINT.
11. DIMENSIONS NOTED AS 'HOLD' SHALL NOT VARY BY MORE THAN 1/8" FROM SIDE TO SIDE OR FROM FRONT TO BACK, FINISHED SURFACE TO FINISHED SURFACE.
12. NFPA 241, STANDARD FOR SAFEGUARDING CONSTRUCTION, AND ALTERATION OPERATIONS SHALL BE APPLIED.
13. WALL AND/OR CEILING ASSEMBLIES THAT ARE IDENTIFIED WITH A FIRE RESISTIVE RATING SHALL BE CONSTRUCTED AS DETAILED HEREIN.
14. DIMENSIONS SHOWN ARE TO FACE OF STUD OR CMU (U.N.O.).
15. PROVIDE EXPANSION AND CONTROL JOINTS IN ALL WORK AS PER PRODUCT MANUFACTURER'S STANDARDS.
16. THE CONTRACTOR SHALL PERFORM ALL WORK IN ACCORDANCE WITH ALL APPLICABLE CODES, ORDINANCES AND REGULATORY AGENCIES AND SHALL OBTAIN NECESSARY BUILDING AND FIRE PERMITS FROM ALL AUTHORITIES HAVING JURISDICTION.
17. ALL INTERIOR FINISH MATERIALS SHALL COMPLY WITH THE REQUIREMENTS OF ALL APPLICABLE CODES, ORDINANCES AND REGULATORY AGENCIES.
18. ALL DISSIMILAR METALS SHALL BE ISOLATED FROM EACH OTHER TO AVOID GALVANIC CORROSION.
19. NOTES APPEAR ON VARIOUS SHEETS FOR DIFFERENT SYSTEMS AND MATERIALS. SHEETS ARE TO BE REVIEWED AND NOTES ON INDIVIDUAL SHEETS SHALL BE APPLIED TO RELATED DRAWINGS AND DETAILS.
20. A FINISH INDICATION ON A WALL SHALL MEAN THE ENTIRE LENGTH AND HEIGHT OF WALL IS TO BE FINISHED OR FIRE-RATED AS INDICATED.
21. WHEN NON-DIMENSIONED PARTITIONS APPEAR IN CONJUNCTION WITH DOOR OPENINGS, THE DOOR WIDTH AND THE DOOR FRAME DETAILS DETERMINE THE LOCATION OF ADJACENT WALLS AND FRAMES.
22. DETAILS NOT SHOWN ARE SIMILAR IN CHARACTER TO THOSE DETAILED. WHERE SPECIFIC DIMENSIONS, DETAILS OR DESIGN INTENT CANNOT BE DETERMINED, CONSULT THE **ARCHITECT** BEFORE PROCEEDING WITH THE WORK.
23. THE CONTRACTOR SHALL COORDINATE ALL MECHANICAL AND ELECTRICAL FLOOR AND WALL SLEEVES INCLUDING CONDUITS WITH ALL MECHANICAL, ELECTRICAL, PLUMBING, FIRE PROTECTION, STRUCTURAL AND ARCHITECTURAL DRAWINGS.
24. PROVIDE ACCESS PANELS AS REQUIRED BY APPLICABLE CODES AND AS REQUIRED FOR MECHANICAL EQUIPMENT AND PLUMBING WORK. ALL ACCESS PANELS SHALL BE CONCEALED AND LOCATIONS SHALL BE REVIEWED WITH THE ARCHITECT PRIOR TO PROCEEDING.
25. ALL PIPE DUCTS AND BUS DUCTS THAT PENETRATE FLOOR SLABS OR WALL PARTITIONS SHALL BE INSTALLED IN A MANNER THAT WILL PRESERVE THE MOISTURE RESISTIVENESS, FIRE RATING, AND STRUCTURAL INTEGRITY OF THE BUILDING.
26. DO NOT CUT INTO, REMOVE OR ALTER ANY STRUCTURAL MEMBER OR PORTION OF THE FLOOR SYSTEM UNLESS IT IS SPECIFICALLY NOTED OR SHOWN ON THE STRUCTURAL DRAWINGS.
27. INTERIOR PARTITION MOVEMENT CONTROL:
    A. VERTICAL CONTROL JOINTS FOR ANY WALL LENGTH ARE TO OCCUR AT NOT MORE THAN 30'-0" O.C. IN THE HORIZONTAL DIRECTION, UNLESS NOTED OTHERWISE.
    B. PROVISIONS SHALL BE MADE IN THE DESIGN, FABRICATION, AND INSTALLATION OF INTERIOR PARTITIONS FOR TYPICAL FLOOR DEFLECTIONS OF THE STRUCTURE UNDER SUPERIMPOSED LOADS AS FOLLOWS: TYPICAL ROOF/FLOOR MEMBERS: SPAN/360 BUT NOT LESS THAN 1/2".
28. THE CONTRACTOR SHALL PLAN HIS/HER WORK TO PROVIDE ADEQUATE PROTECTION FOR PERSONS AND PROPERTY AT ALL TIMES, AND EXECUTE THE WORK IN SUCH A MANNER TO AVOID ANY HAZARD TO PERSONS AND PROPERTY AS NECESSARY.
29. THE CONTRACTOR SHALL COORDINATE THE PHASING OF THE WORK TO BE PERFORMED IN OR ABOUT EXISTING FACILITIES, IF APPLICABLE, WITH THE **OWNER, OWNER'S REPRESENTATIVE** PRIOR TO START OF SUCH WORK.

SYMBOLS:

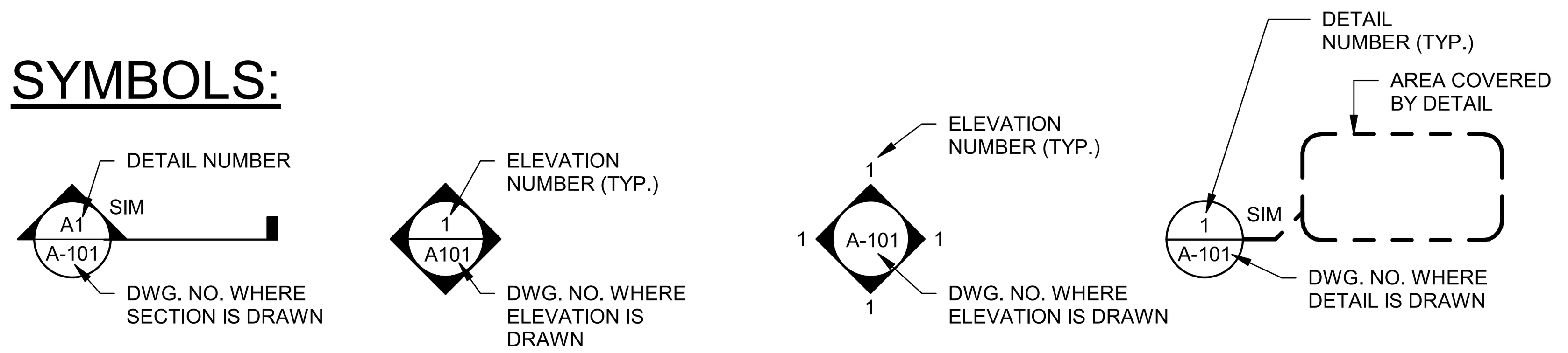

DETAIL SECTION MARK | EXTERIOR ELEVATION MARK | INTERIOR ELEVATION MARK | CALLOUT HEAD

PLAN SYMBOLS:

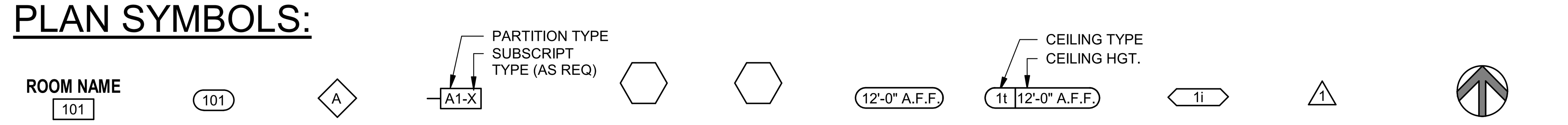

ROOM TAG | DOOR TAG | WINDOW & LOUVER TAG | PARTITION TYPE | KEYNOTE TAG | DEMOLITION KEYNOTE TAG (NAVFAC) | CEILING TAG (HEIGHT) | CEILING TAG (TYPE & HEIGHT) | EQUIPMENT TAG | REVISION TAG | NORTH ARROW

VIEW TITLES:

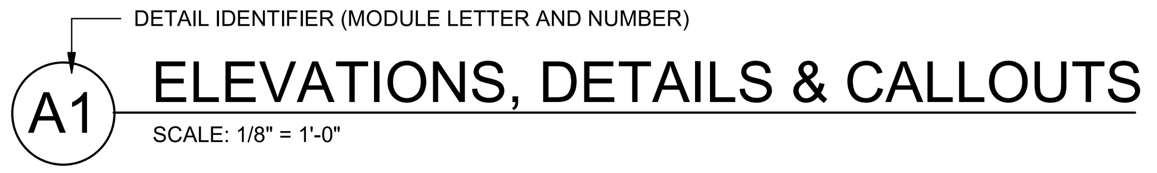

FLOOR PLANS, ELEVATIONS OR DETAIL VIEWS TITLE

MATERIALS IN SECTION - FILL PATTERNS:

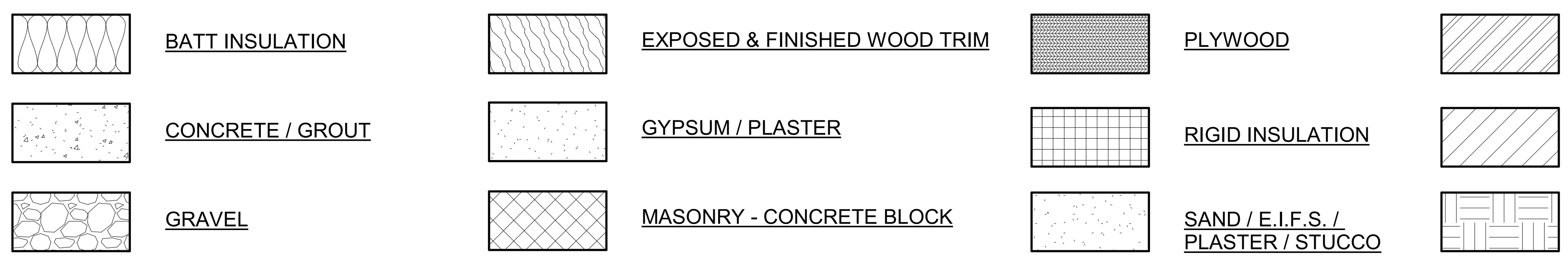

BATT INSULATION | EXPOSED & FINISHED WOOD TRIM | PLYWOOD | STEEL
CONCRETE / GROUT | GYPSUM / PLASTER | RIGID INSULATION | MASONRY - BRICK
GRAVEL | MASONRY - CONCRETE BLOCK | SAND / E.I.F.S. / PLASTER / STUCCO | EARTH

SANDY SPRINGS GEORGIA

SEAL

MARK	DESCRIPTION	DATE
0	LDP SUBMITTAL	2019.09.24
1	BID SET / CITY COMMENTS	2019.10.11

ISSUE DATE: 10/11/19
SOLICITATION NO.: SOL-XX-X-XXXX
CONTRACT NO.: CONTRACT NUMBER
FILE NUMBER: XX-X-XXXX
PLOT DATE: 10/11/19

DESIGNED BY: RJL
DWN BY: RJL | CKD BY: CLS
SUBMITTED BY:
FILE NAME:
SIZE: 22"x34" | PLOT SCALE:

CITY OF SANDY SPRINGS:
SANDY SPRINGS CITY HALL
1 GALAMBOS WAY
SANDY SPRINGS, GA 30328

POND
3500 Parkway Lane
Peachtree Corners, GA
30092, Suite 500
Phone (678) 336-7740
Fax (678) 336-7744
JOB NO. 1190708

HERITAGE PARK IMPROVEMENTS

GENERAL NOTES, ABBREVIATIONS & SYMBOLS

SHEET IDENTIFICATION NUMBER

A-001

Copyright © 2019 by Pond & Company. All rights reserved. No copying or duplication of these documents is allowed without the express written agreement of Pond & Company.

10/10/2019 4:59:17 PM C:\Users\locaminr\Documents\1190708_SS_Heritage_Park_ARCH_v19_LocaminR.rvt

PARTITION TYPES SCHEDULE

PTN TYPE	CMU WIDTH	FURRING WIDTH	PTN WIDTH	NOTES
A	0' - 7 5/8"		0' - 7 5/8"	TYP. PARTITION CONNECTION
E1		0' - 2"	0' - 3 7/8"	PARTITION HEIGHT PROVIDED PER DETAIL A1/A-302
E2		0' - 2"	0' - 3 1/2"	TYP. PARTITION CONNECTION

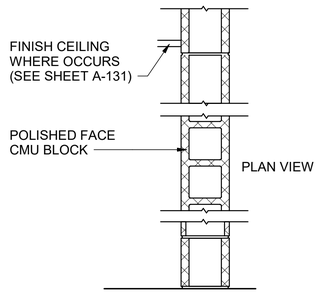

A 8" CMU BLOCK PARTITION
SCALE : 1" = 1'-0"

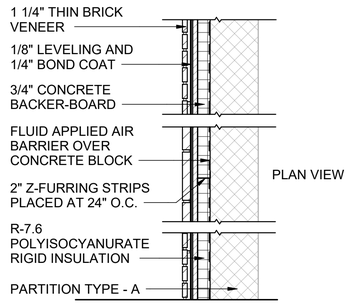

E1 EXTERIOR THIN BRICK FINISH
SCALE : 1" = 1'-0"

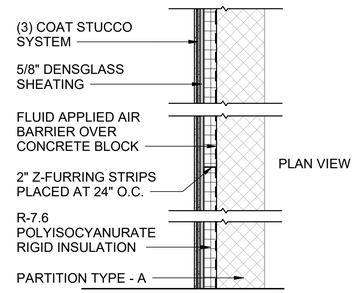

E2 EXTERIOR STUCCO FINISH
SCALE : 1" = 1'-0"

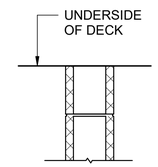

TYP

TYP - CONDITION

EXTEND TOTAL
PARTITION TO
STRUCTURE

GENERAL NOTES:

1. TYPICAL FLOOR PLAN DIMENSIONS OF PARTITIONS ARE TO FACE OF STUD OR CMU UNLESS NOTED OTHERWISE.
2. METAL STUD GAUGE (IF NOTED) AND UL TEST NUMBERS WILL VARY DEPENDING ON THE MANUFACTURER OF COMPONENTS ACTUALLY USED.
3. INSTALL BLOCKING OR BACKER MATERIAL FOR ATTACHMENT / MOUNTING OF WALL HUNG ITEMS OR EQUIPMENT DESCRIBED IN THE DOCUMENTS.
4. PARTITION TYPES DESCRIBE GENERAL REQUIREMENTS FOR PARTITIONS. REFER TO THE MANUFACTURER'S SPECIFICATIONS AND REQUIREMENTS OF APPLICABLE TESTING AGENCIES FOR SPECIFICS OF PARTITION CONSTRUCTION.
5. WHERE A CLEAR DIMENSION OR OPENING IS REQUIRED OR NOTED, MEASURE DIMENSION TO FACE OF PARTITION OR FINISH.

SANDY SPRINGS
GEORGIA

STATE OF GEORGIA
MICHAEL LEE HATZIN
GEORGIA CERT. NO. RA016157
REGISTERED ARCHITECT
10/4/2019
SEAL

MARK	DESCRIPTION	DATE
1	BID SET / CITY COMMENTS	2019.10.11
0	LDP SUBMITTAL	2019.09.24

ISSUE DATE: 10/11/19
SOLICITATION NO.: SOL-XX-X-XXXX
CONTRACT NO.: CONTRACT NUMBER
FILE NUNBER: XXX-XX-XXX
PLOT DATE: 10/11/19
DESIGNED BY: RJL
CKD BY: CLS
DWN BY: RJL
SUBMITTED BY:
FILE NAME:
SIZE: 22"X34"
PLOT SCALE:

CITY OF SANDY SPRINGS:
SANDY SPRINGS CITY HALL
1 GALAMBOS WAY
SANDY SPRINGS, GA 30328

POND
3500 Parkway Lane
Peachtree Corners, GA
30092 Suite 470
Phone (678) 336-7140
Fax (678) 336-7144
JOB NO. 1190708

HERITAGE PARK
IMPROVEMENTS

PARTITION TYPES & DETAILS

SHEET
IDENTIFICATION
NUMBER
A-002

10/10/2019 4:59:18 PM C:\Users\locaminin\Documents\1190708_SS_Heritage_Park_ARCH_v19_LocaminiR.rvt

Copyright © 2019 by Pond & Company. All rights reserved. No copying or duplication of these documents is allowed without the express written agreement of Pond & Company.

WALL LEGEND

	NEW CMU PARTITIONS

FLOOR PLAN NOTES:

1. SEE SHEET A-001 FOR GENERAL NOTES.
2. SEE STRUCTURAL, MECHANICAL, PLUMBING & ELECTRICAL DRAWINGS FOR ADDITIONAL INFORMATION.
3. DIMENSIONS OF EXTERIOR WALLS ARE TO FACE OF CMU BLOCKING.
4. PARTITION TYPES ARE INDICATED WITH . SEE SHEET A-002 FOR PARTITION TYPES.
5. DOORS ARE INDICATED WITH . SEE SHEET A-601 FOR DOOR SCHEDULE AND TYPES.
6. PARTITIONS SHALL BE TYPE "A" (NO SUBSCRIPT) UNLESS OTHERWISE INDICATED.
7. SLAB TO BE SLOPED IN A WAY AS TO ENSURE POSITIVE DRAINAGE TOWARDS FLOOR DRAIN.

KEYNOTES:

(KEYNOTE NUMBERS ARE SHEET SPECIFIC AND NOT UNIFORM ACROSS ALL SHEETS)

KEYNOTES A-101

NOTE #	DESCRIPTION
1	EXTENTS OF PREFINISHED, COMMERCIAL GRADE STANDING SEAM METAL ROOF (ABOVE)
2	EXTENTS OF PREFINISHED METAL ROOF GUTTER (ABOVE)
3	STAIRS FROM UTILITY CHASE. SEE CIVIL FOR MORE INFORMATION
4	VERTICAL VEGITATED SCREEN. SEE LANDSCAPE ARCHITECTURE FOR MORE INFORAMTION

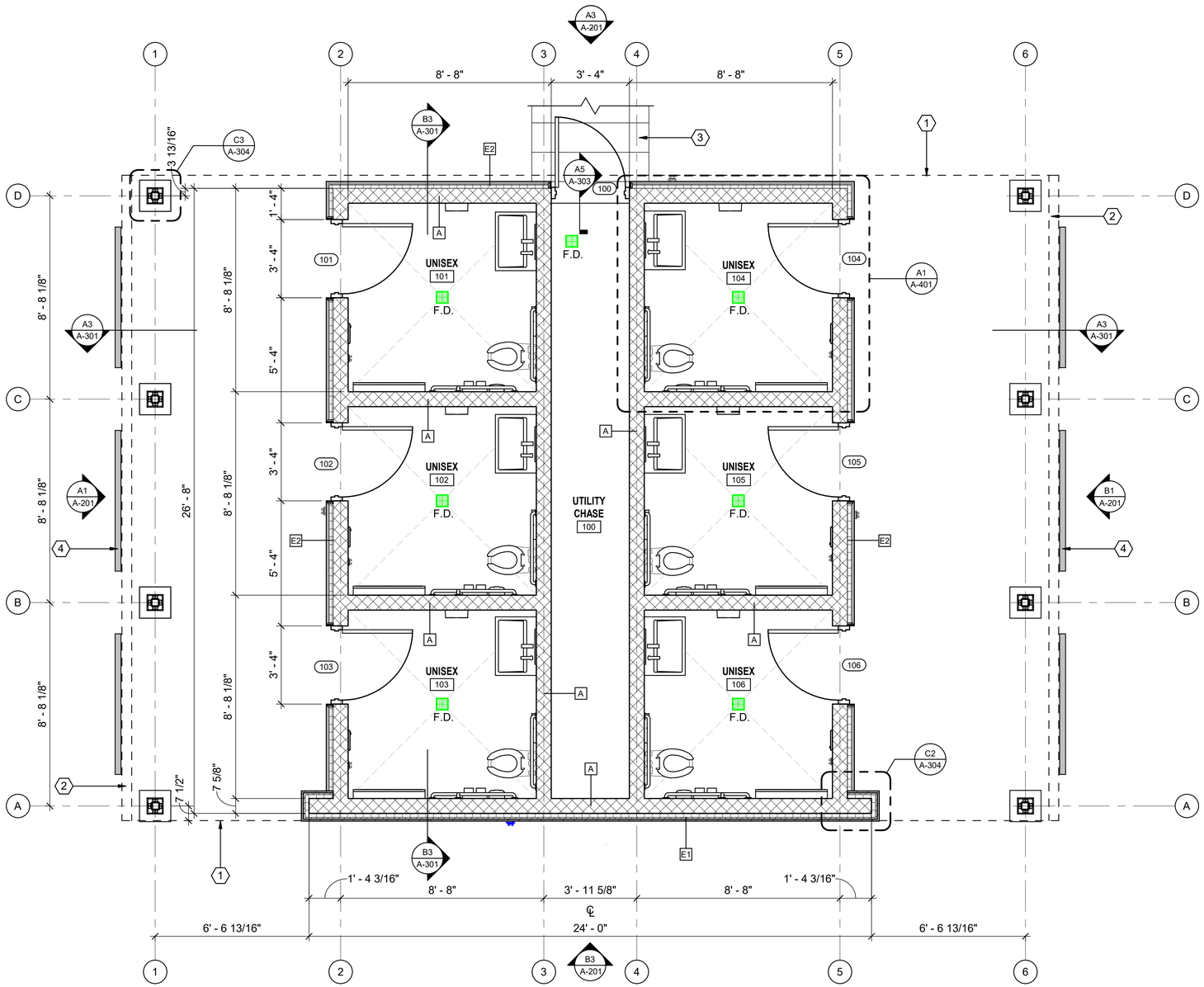

A1 RESTROOM FACILITY FLOOR PLAN

SCALE: 3/8" = 1'-0"

2 0 2 4 6

SCALE: 3/8" = 1'-0"

SANDY SPRINGS GEORGIA

STATE OF GEORGIA MICHAEL LEE KATZIN 10/11/2019 GEORGIA CERTIFICATE NO. 0000 REGISTERED ARCHITECT

SEAL

MARK	DESCRIPTION	DATE
1	BID SET / CITY COMMENTS	2019.10.11
0	LDP SUBMITTAL	2019.09.24

DESIGNED BY: RJL
DWN BY: RJL
CKD BY: CLS
SUBMITTED BY:
FILE NAME:
SIZE: 22"X34"
PLOT SCALE:
ISSUE DATE: 10/11/19
SOLICITATION NO.: SOL-XX-X-XXX
CONTRACT NO.: CONTRACT NUMBER
FILE NUMBER: XX-XXXX-XX
PLOT DATE: 10/11/19

CITY OF SANDY SPRINGS:
SANDY SPRINGS CITY HALL
1 GALAMBOS WAY
SANDY SPRINGS, GA 30328

POND
3500 Parkway Lane
Peachtree Corners, GA
30092 Suite 470
Phone (678) 336-7140
Fax (678) 336-7144

JOB NO. 1190708

HERITAGE PARK IMPROVEMENTS

FLOOR PLAN

SHEET IDENTIFICATION NUMBER

A-101

10/10/2019 4:59:19 PM C:\Users\locamini\Documents\1190708_SS_Heritage_Park_ARCH_v19_LocaminiR.rvt

Copyright © 2019 by Pond & Company. All rights reserved. No copying or duplication of these documents is allowed without the express written agreement of Pond & Company.

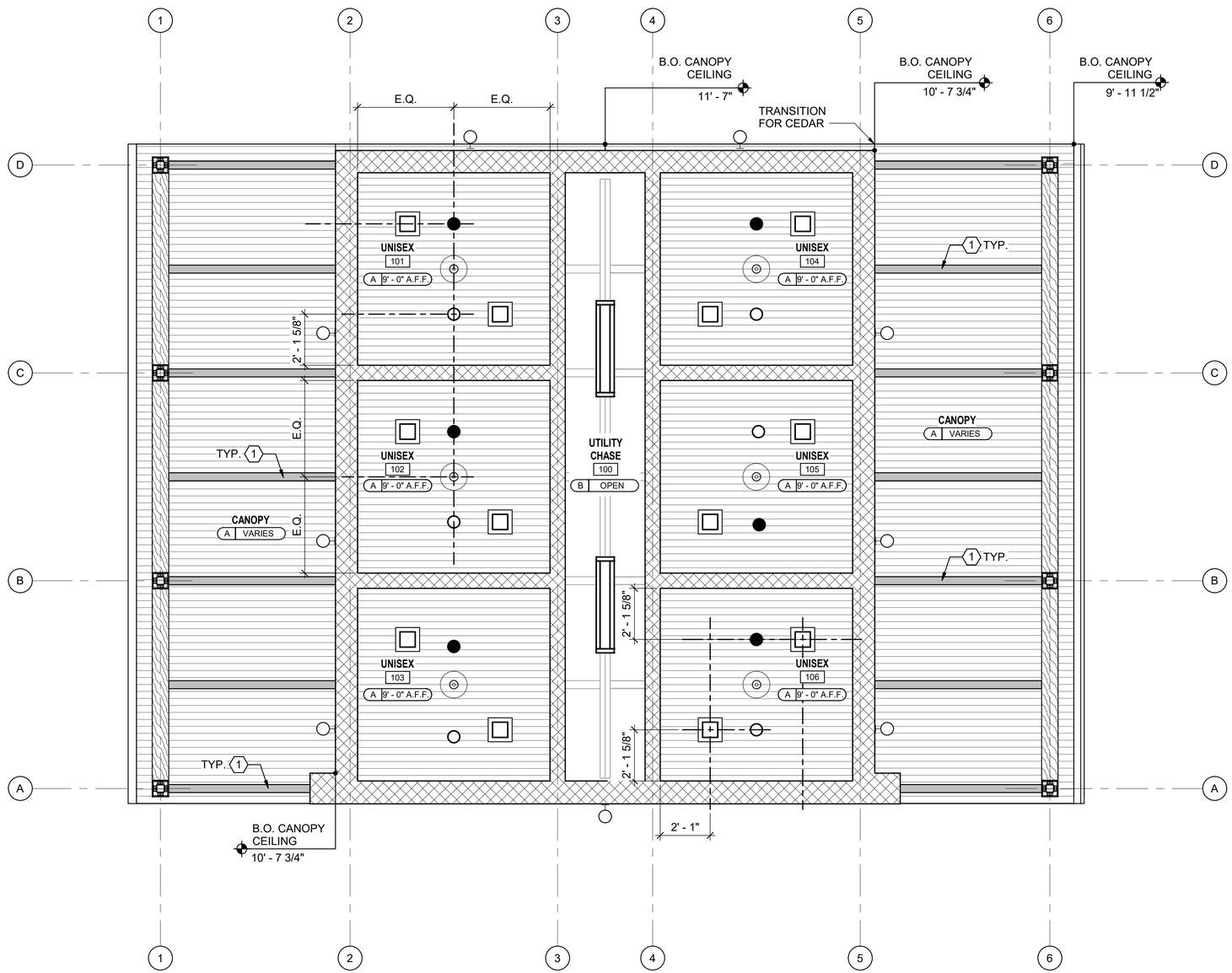

A1 RESTROOM FACILITY REFLECTED CEILING PLAN

SCALE: 3/8" = 1'-0"

GENERAL RCP SHEET NOTES:

1. ALL CEILING MOUNTED DEVICES SHALL BE CENTERED IN BOTH DIRECTIONS IN TONGUE AND GROOVE WOOD PANELS U.N.O.
2. CEILING HEIGHTS INDICATED (I.E. 9'-0") ARE RELATIVE TO THE FINISH FLOOR ELEVATION OF THE ROOM FOR WHICH THEY ARE INDICATED.
3. FINISHED CEILING CONDITIONS SHALL BE ORIENTED WITHIN SPACES AS SHOWN, U.N.O. FULL CEDAR PANELS WHERE INDICATED. CENTER CEDAR TONGUE AND GROOVE CEILING SYSTEM IN ROOM TO ACHIEVE EQUAL TRIM PIECES AT ROOM EDGES.
4. DEVICES HAVE BEEN SHOWN FOR COORDINATION PURPOSES. ALL DEVICES MAY NOT BE SHOWN.
5. THE CONTRACTOR SHALL ENSURE THE INSTALLATION OF ALL DEVICES INDICATED ON THE ENGR. DWG. SEE MECHANICAL, ELECTRICAL, PLUMBING AND FIRE PROTECTION DRAWINGS FOR ITEMS NOT SHOWN ON REFLECTED CEILING PLANS. CONTACT THE ARCHITECT IF ANY CONFLICTS OCCUR.
6. DIMENSIONS PROVIDED FOR FIXTURES WITHIN UNISEX STALL AREAS ARE TO BE APPLIED TO ALL SIMILAR / OPPOSITE-HAND SPACES. EG: DIFFUSERS DIMENSIONED IN STALL 101 APPLY TO ALL RESTROOMS.

REFLECTED CEILING PLAN LEGEND

- DOWNLIGHT
- EMERGENCY DOWNLIGHT
- 1' X 4' FIXTURE
- 12" X 12" MECH. AIR TERMINAL. SEE MEP
- EXT. WALL MOUNTED FIXTURE
- OCCUPANCY SENSOR
- A 1" x 4" TONGUE AND GROOVE CEDAR CEILING
- B OPEN TO STRUCTURE ABOVE

KEYNOTES:

(KEYNOTE NUMBERS ARE SHEET SPECIFIC AND NOT UNIFORM ACROSS ALL SHEETS)

KEYNOTES A-131	
NOTE #	DESCRIPTION
1	AESS 2 WITH HIGH PERFORMANCE COATING

2 0 2 4 6

SCALE: 3/8" = 1'-0"

SANDY SPRINGS GEORGIA

STATE OF GEORGIA
MICHAEL LEE KATZIN
10/11/2019
CERTIFICATE NO. RA06031
REGISTERED ARCHITECT
SEAL

MARK	DESCRIPTION	DATE
1	BID SET / CITY COMMENTS	2019.10.11
0	LDP SUBMITTAL	2019.09.24

DESIGNED BY: RJL
DWN BY: RJL
CKD BY: CLS
SUBMITTED BY:
FILE NAME:
SIZE: 22"X34"
PLOT SCALE:
ISSUE DATE: 10/11/19
SOLICITATION NO.: SOL-XX-X-XXXX
CONTRACT NO.: CONTRACT NUMBER
FILE NUMBER: XX-X-XXXX
PLOT DATE: 10/11/19

CITY OF SANDY SPRINGS:
SANDY SPRINGS CITY HALL
1 GALAMBOS WAY
SANDY SPRINGS, GA 30328

POND
3500 Parkway Lane
Peachtree Corners, GA
30092, Suite 500
Phone (678) 336-7740
Fax (678) 336-7744
JOB NO. 1190708

HERITAGE PARK IMPROVEMENTS

REFLECTED CEILING PLAN

SHEET IDENTIFICATION NUMBER
A-131

10/10/2019 4:59:19 PM C:\Users\locaminir\Documents\1190708_SS_Heritage_Park_ARCH_v19_LocaminiR.rvt

Copyright © 2019 by Pond & Company. All rights reserved. No copying or duplication of these documents is allowed without the express written agreement of Pond & Company.

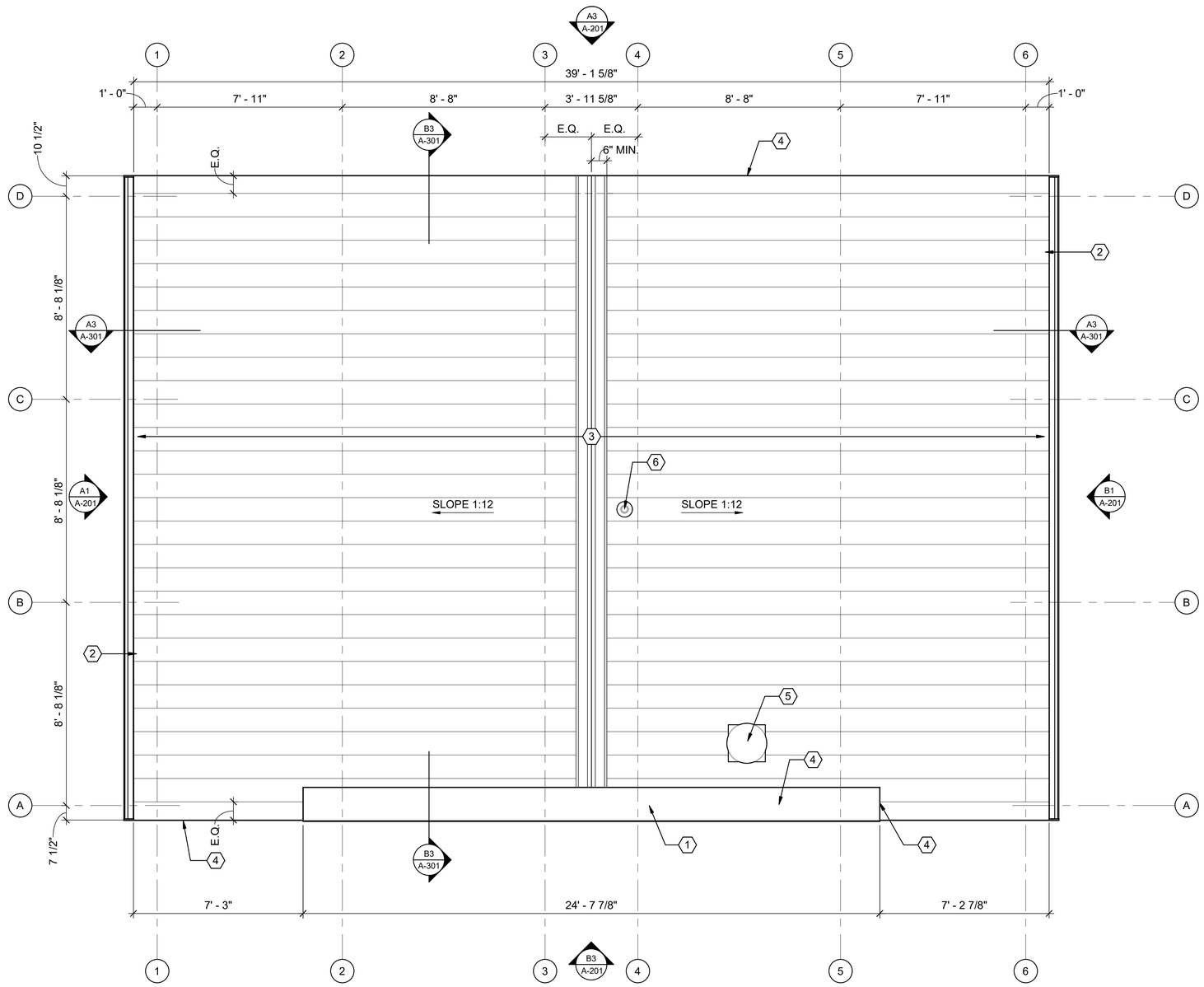

A1 RESTROOM FACILITY ROOF PLAN

SCALE: 3/8" = 1'-0"

GENERAL ROOF PLAN SHEET NOTES:

1. ALL SLOPES ARE APPROXIMATE. REFER TO STRUCTURAL FOR B.O. DECK DIMENSIONS

KEYNOTES:

(KEYNOTE NUMBERS ARE SHEET SPECIFIC AND NOT UNIFORM ACROSS ALL SHEETS)

KEYNOTES A-151	
NOTE #	DESCRIPTION
1	PREFINISHED METAL PARAPET CAP
2	PREFINISHED METAL ROOF GUTTER
3	EXTENTS OF COMMECRIAL GRADE, PREFINISHED STANDING SEAM METAL ROOF
4	PREFINISHED STANDING SEAM METAL ROOF RAKE EDGE
5	ROOF HOOD AT STANDING SEAM METAL ROOF, SEE MEP FOR MORE INFORMATION
6	VENT PIPE PENETRATION THROUGH STANDING SEAM METAL ROOF, SEE MEP FOR MORE INFORMATION

2 0 2 4 6

SCALE: 3/8" = 1'-0"

SANDY SPRINGS GEORGIA

STATE OF GEORGIA MICHAEL LEE KATZIN GEORGIA CERT. NO. 5MR0001 REGISTERED ARCHITECT 10/11/2019

SEAL

MARK	DESCRIPTION	DATE
1	BID SET / CITY COMMENTS	2019.10.11
0	LDP SUBMITTAL	2019.09.24

ISSUE DATE: 10/11/19
SOLICITATION NO.: SOL-XX-X-XXXX
CONTRACT NO.: CONTRACT NUMBER
FILE NUMBER: XXX-XXXX
PLOT DATE: 10/11/19

DESIGNED BY: RJL
DWN BY: RJL
CKD BY: CLS
SUBMITTED BY:
FILE NAME:
SIZE: 22"X34"
PLOT SCALE:

CITY OF SANDY SPRINGS:
SANDY SPRINGS CITY HALL
1 GALAMBOS WAY
SANDY SPRINGS, GA 30328

POND
3500 Parkway Lane
Peachtree Corners, GA
30092 (Suite 300)
Phone (678) 336-7740
Fax (678) 336-7744

JOB NO. 1190708

HERITAGE PARK IMPROVEMENTS

ROOF PLAN

SHEET IDENTIFICATION NUMBER

A-151

10/10/2019 4:59:20 PM C:\Users\locamin\Documents\1190708_SS_Heritage_Park_ARCH_v19_LocaminR.rvt

Copyright © 2019 by Pond & Company. All rights reserved. No copying or duplication of these documents is allowed without the express written agreement of Pond & Company.

KEYNOTES:

(KEYNOTE NUMBERS ARE SHEET SPECIFIC AND NOT UNIFORM ACROSS ALL SHEETS)

KEYNOTES A-201

NOTE #	DESCRIPTION
1	PREFINISHED STANDING SEAM METAL ROOF
2	PREFINISHED 5"x5" BEVEL METAL GUTTER
3	CEDAR WRAPPED COLUMN. SEE DETAILS A4/A-303 AND C3/A-304 FOR MORE INFORMATION
4	PREFINISHED METAL PARAPET CAP
5	ARCHITECTURAL VENEER
6	TREATED CEDAR BASE
7	VERTICAL VEGITATED SCREEN. BRICK VENEER TO CONTINUE BEHIND. SEE LANDSCAPE ARCHITECTURE FOR MORE INFORAMTION
8	NOT USED
9	FIBER CEMENT SIDING
10	PAINTED HOLLOW METAL DOOR & FRAME
11	LOUVER. SEE MECHANICAL FOR MORE INFORMATION
12	EXTERIOR LIGHT. SEE ELECTRICAL FOR MORE INFORMATION

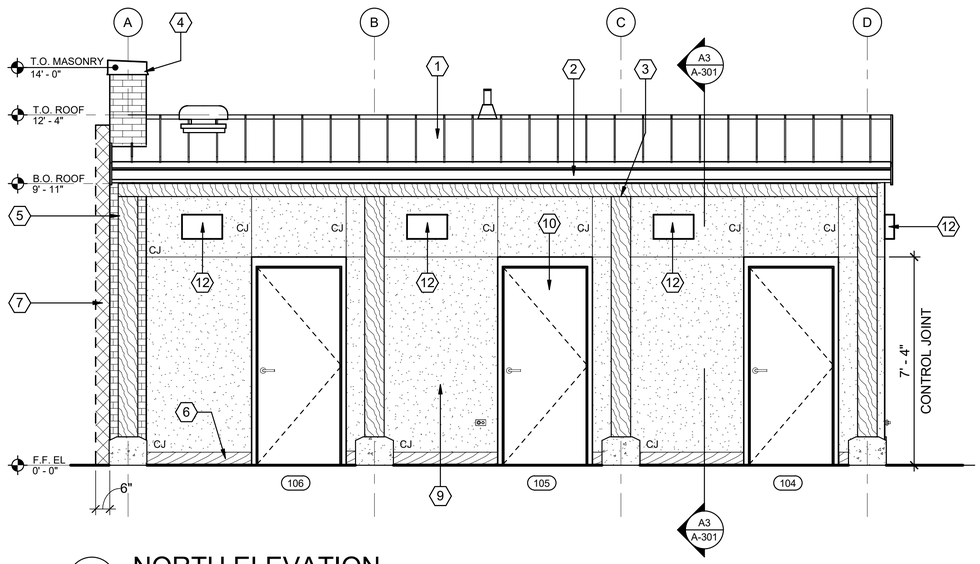

B1 NORTH ELEVATION
SCALE: 3/8" = 1'-0"

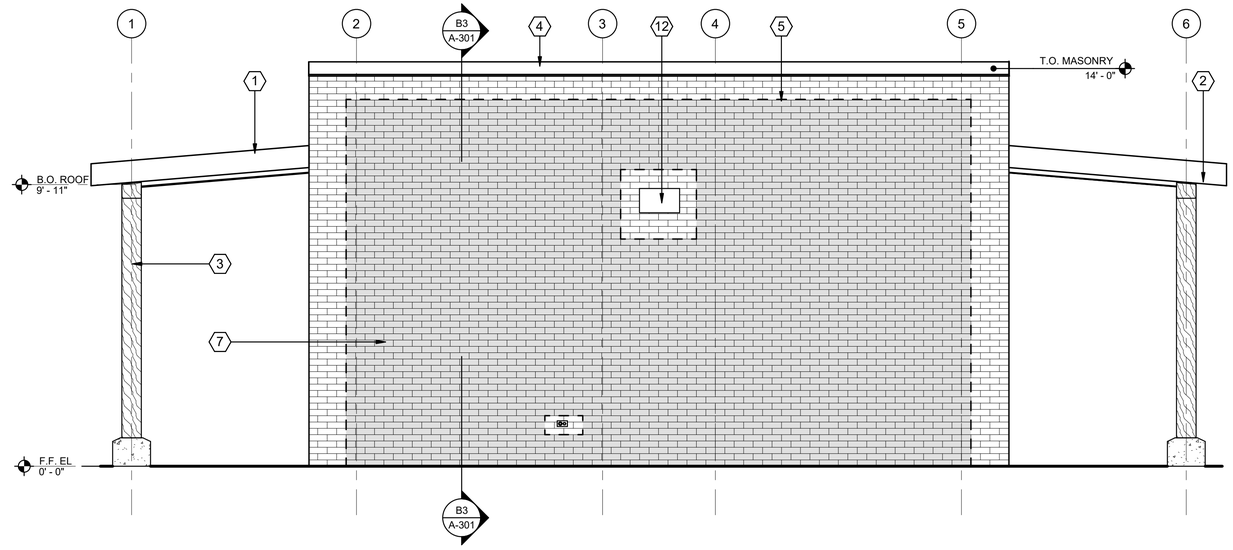

B3 EAST ELEVATION
SCALE: 3/8" = 1'-0"

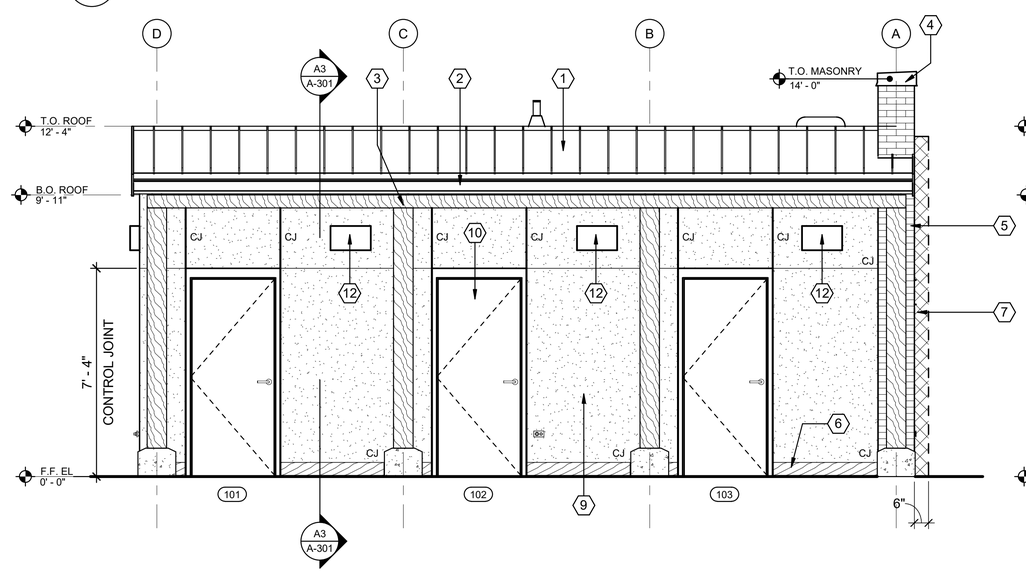

A1 SOUTH ELEVATION
SCALE: 3/8" = 1'-0"

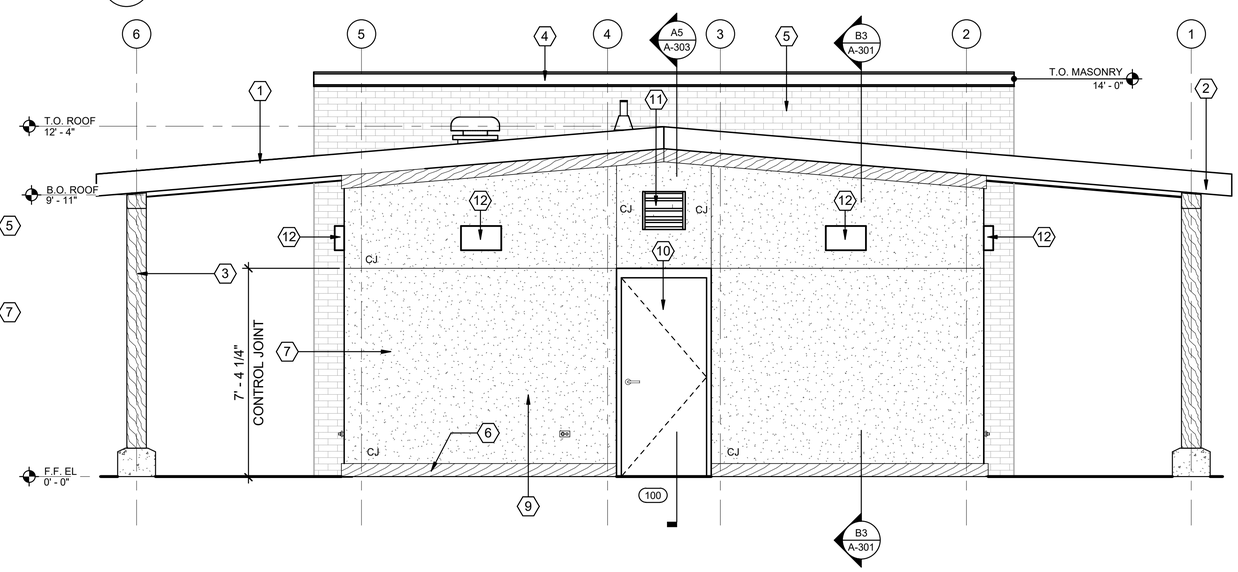

A3 WEST ELEVATION
SCALE: 3/8" = 1'-0"

2 0 2 4 6
SCALE: 3/8" = 1'-0"

SANDY SPRINGS GEORGIA

STATE OF GEORGIA MICHAEL LEE KATZIN GEORGIA CERT. NO. RA016157 REGISTERED ARCHITECT 10/4/2019
SEAL

MARK	DESCRIPTION	DATE
1	BID SET / CITY COMMENTS	2019.10.11
0	LDP SUBMITTAL	2019.09.24

ISSUE DATE: 10/11/19
SOLICITATION NO.: SOL-XX-X-XXXX
CONTRACT NO.: CONTRACT NUMBER
FILE NUMBER: XX-XXXXX
DESIGNED BY: RJL
DWN BY: RJL
CKD BY: CLS
SUBMITTED BY:
FILE NAME:
PLOT DATE: 10/11/19
SIZE: 22"X34"
PLOT SCALE:

CITY OF SANDY SPRINGS:
SANDY SPRINGS CITY HALL
1 GALAMBOS WAY
SANDY SPRINGS, GA 30328

POND
300 Parkway Lane
Peachtree Corners, GA 30092-2929
Phone (678) 336-7140
Fax (678) 336-7144
JOB NO. 1190708

HERITAGE PARK IMPROVEMENTS

EXTERIOR ELEVATIONS

SHEET IDENTIFICATION NUMBER
A-201

10/10/2019 4:59:21 PM C:\Users\locaminin\Documents\1190708_SS_Heritage_Park_ARCH_v19_LocaminiR.rvt

Copyright © 2019 by Pond & Company. All rights reserved. No copying or duplication of these documents is allowed without the express written agreement of Pond & Company.

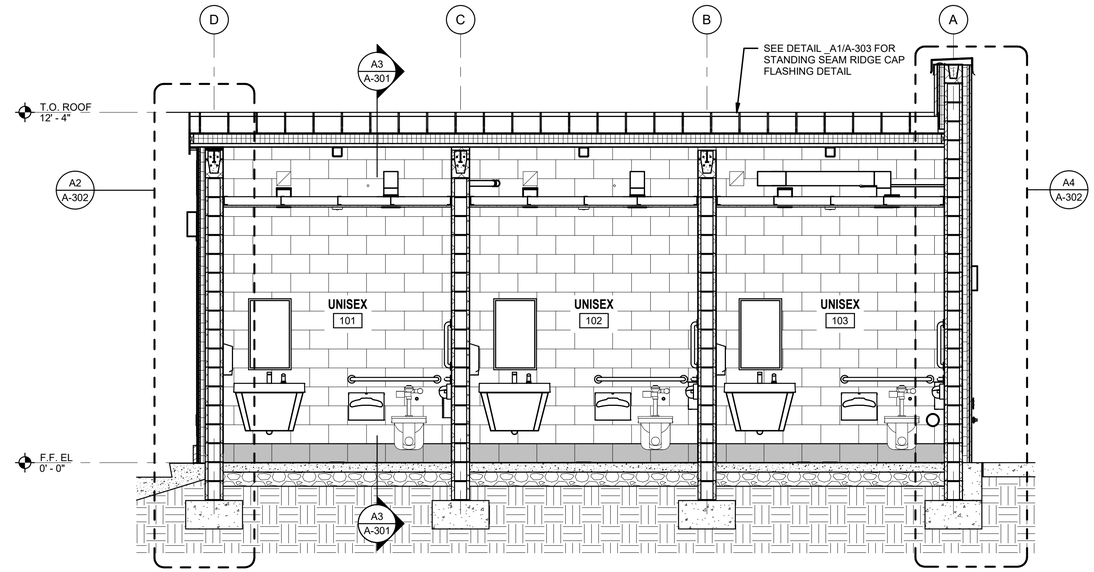

B3 BUILDING SECTION

SCALE: 3/8" = 1'-0"

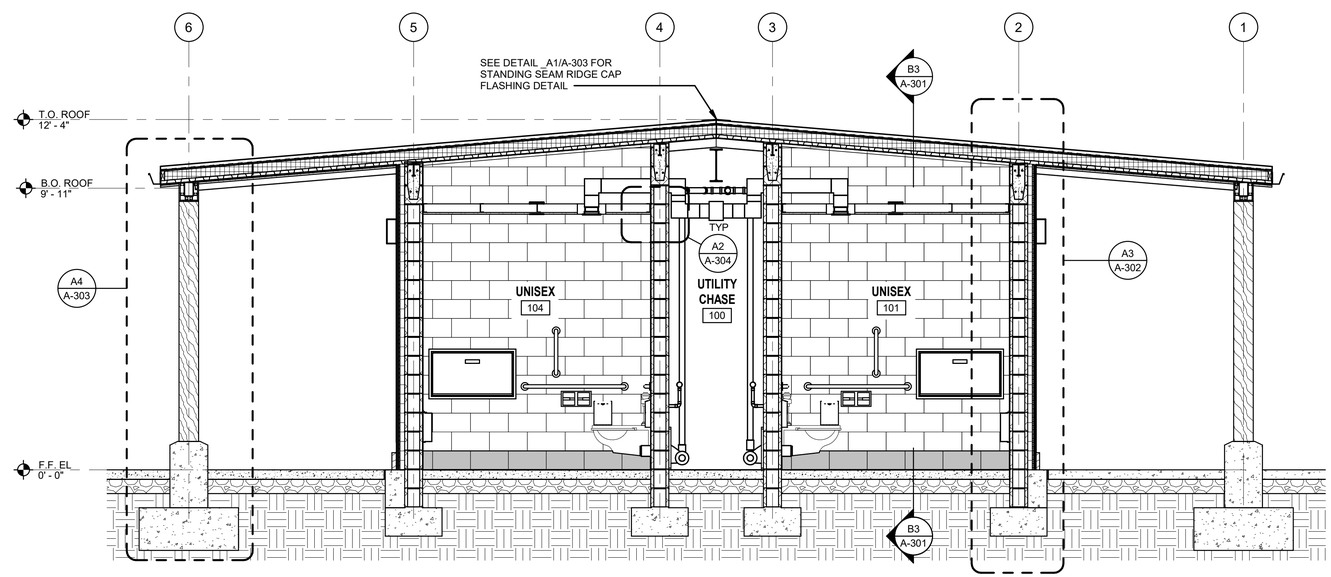

A3 BUILDING SECTION

SCALE: 3/8" = 1'-0"

2 0 2 4 6

SCALE: 3/8" = 1'-0"

SANDY SPRINGS
GEORGIA

STATE OF GEORGIA
MICHAEL LEE KATZIN
10/11/2019
CERTIFICATE NO. RA09511
REGISTERED ARCHITECT
SEAL

MARK	DESCRIPTION	DATE
1	BID SET / CITY COMMENTS	2019.10.11
0	LDP SUBMITTAL	2019.09.24

DESIGNED BY: RJL
DWN BY: RJL
CKD BY: CLS
SUBMITTED BY:
FILE NAME:
SIZE: 22"X34"
PLOT SCALE:
ISSUE DATE: 10/11/19
SOLICITATION NO.: SOL-XX-X-XXXX
CONTRACT NO.: CONTRACT NUMBER
FILE NUNBER: XX-X-XXXX
PLOT DATE: 10/11/19

CITY OF SANDY SPRINGS:
SANDY SPRINGS CITY HALL
1 GALAMBOS WAY
SANDY SPRINGS, GA 30328

POND
3500 Parkway Lane
Peachtree Corners, GA
30092, Suite 500
Phone (678) 336-7740
Fax (678) 336-7744
JOB NO. 1190708

HERITAGE PARK IMPROVEMENTS

BUILDING SECTIONS

SHEET IDENTIFICATION NUMBER

A-301

10/10/2019 4:59:25 PM C:\Users\locaminir\Documents\1190708_SS_Heritage_Park_ARCH_v19_LocaminiR.rvt

Copyright © 2019 by Pond & Company. All rights reserved. No copying or duplication of these documents is allowed without the express written agreement of Pond & Company.

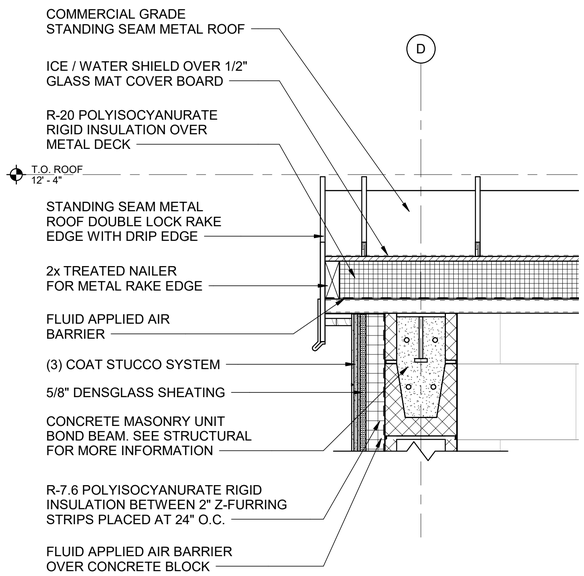

C1 STANDING SEAM OVERHANG DETAIL

SCALE: 1 1/2" = 1'-0"

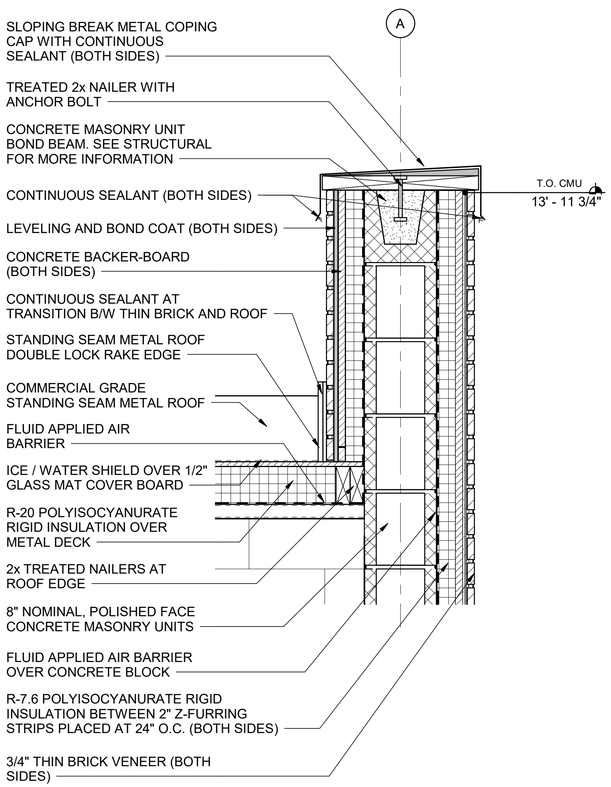

A1 WALL SECTION AT PARAPET CAP

SCALE: 1 1/2" = 1'-0"

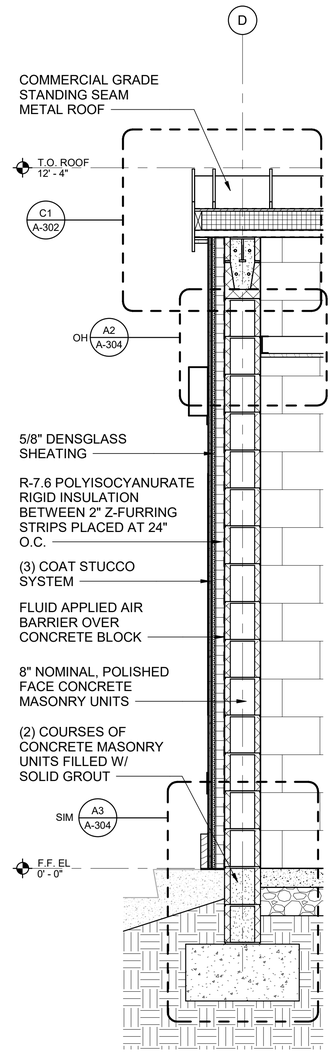

A2 WALL SECTION AT REAR

SCALE: 3/4" = 1'-0"

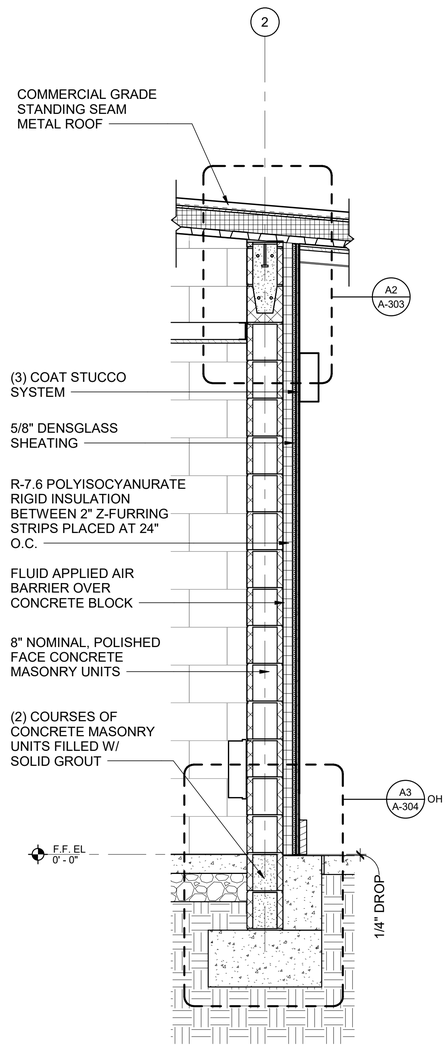

A3 WALL SECTION AT SIDE

SCALE: 3/4" = 1'-0"

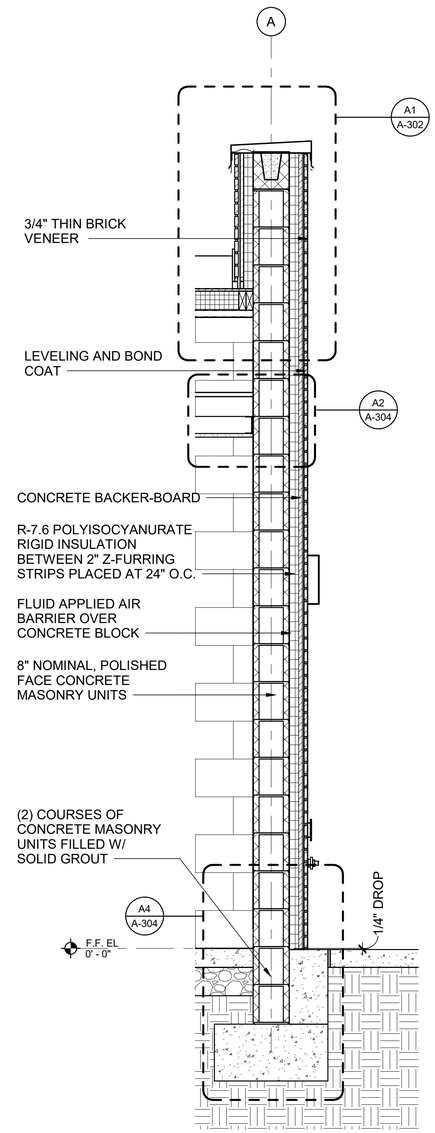

A4 WALL SECTION AT PARAPET

SCALE: 3/4" = 1'-0"

1 0 1

SCALE: 1 1/2" = 1'-0"

1 0 1 2 3

SCALE: 3/4" = 1'-0"

SANDY SPRINGS
GEORGIA

STATE OF GEORGIA
MICHAEL LEE KATZIN
GEORGIA NO. 5[illegible]
REGISTERED ARCHITECT
SEAL

MARK	DESCRIPTION	DATE
1	BID SET / CITY COMMENTS	2019.10.11
0	LDP SUBMITTAL	2019.09.24

ISSUE DATE: 10/11/19
DESIGNED BY: RJL
DWN BY: RJL
CKD BY: CLS
SOLICITATION NO.: SOL-XX-X-XXXX
SUBMITTED BY:
CONTRACT NO.: CONTRACT NUMBER
FILE NUMBER: XXX-XXXX
FILE NAME:
SIZE: 22"X34"
PLOT SCALE: 1:1
PLOT DATE: 10/11/19

CITY OF SANDY SPRINGS:
SANDY SPRINGS CITY HALL
1 GALAMBOS WAY
SANDY SPRINGS, GA 30328

POND
3600 Parkway Lane,
Peachtree Corners, GA
30092 USA 30360
Phone (678) 336-7140
Fax (678) 336-7144

JOB NO. 1190708

HERITAGE PARK IMPROVEMENTS

WALL SECTIONS

SHEET IDENTIFICATION NUMBER
A-302

Copyright © 2019 by Pond & Company. All rights reserved. No copying or duplication of these documents is allowed without the express written agreement of Pond & Company.

10/10/2019 4:59:26 PM C:\Users\locaminin\Documents\1190708_SS_Heritage_Park_ARCH_v19_LocaminiR.rvt

NOTES:
1. LOUVER/ DAMPER ASSEMBLIES TO BE ASSEMBLED AT LOUVER MANUFACTURER FACTORY.
2. CLIP ANGLES AND EXTENDED SILL TO BE PROVIDED BY LOUVER MANUFACTURER.
3. MOTOR ACTUATORS TO BE SIZED AND INSTALLED BY LOUVER MANUFACTURER.
4. INSTALLATION OF LOUVER TO BE IN ACCORDANCE WITH LOUVER MANUFACTURER'S RECOMMENDATIONS.
5. DAMPER COMBINATION TO BE PROVIDED ONLY AT REAR OF FACILITY, NOT TO BE UTILIZED AT THE THIN0BRICK ACCENT WALL

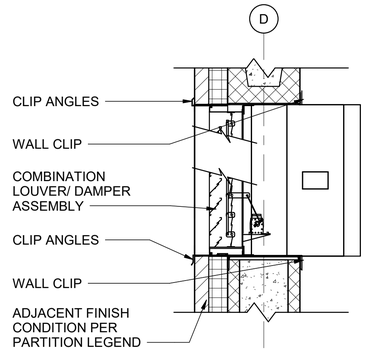

C2 LOUVER DETAIL
SCALE: 1 1/2" = 1'-0"

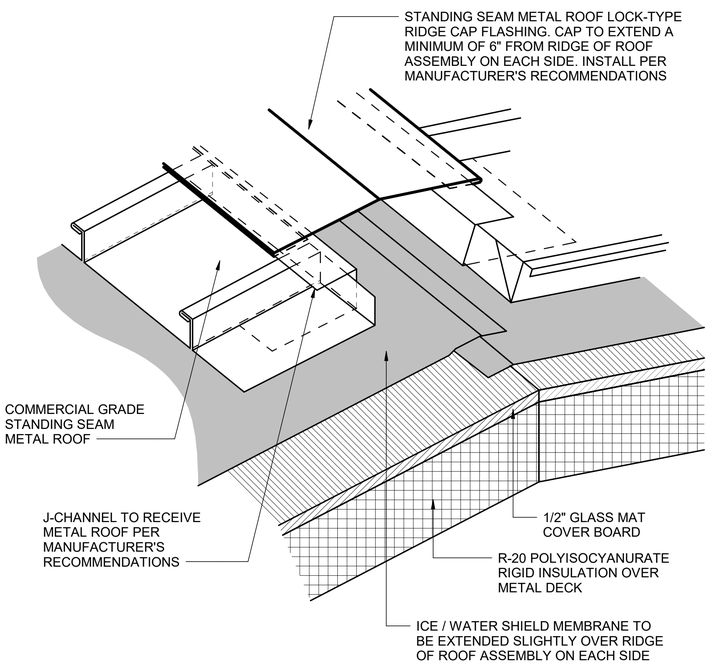

A1 ROOF RIDGE DETAIL
SCALE: N.T.S.

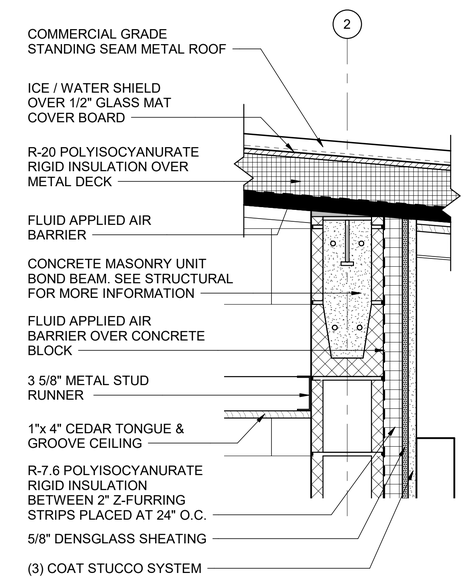

A2 SIDE WALL BOND BEAM DETAIL
SCALE: 1 1/2" = 1'-0"

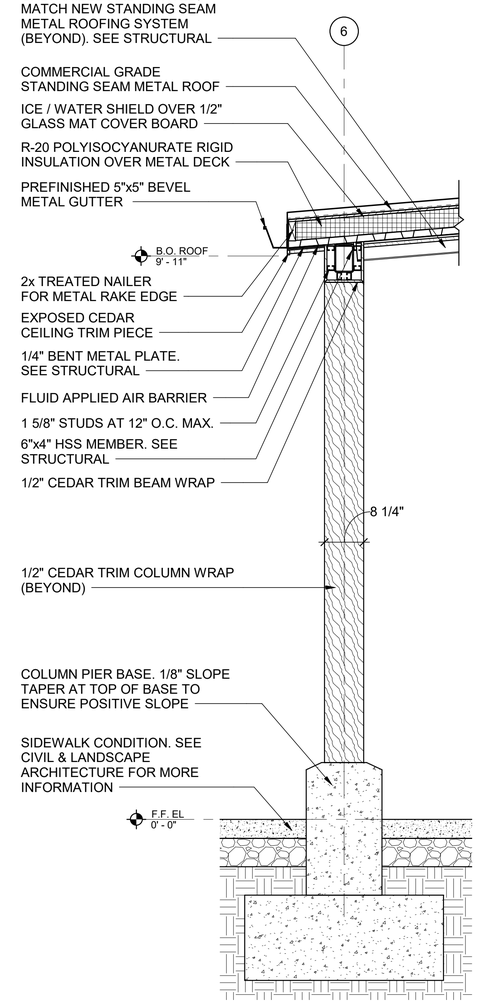

A4 SECTION AT COLUMN
SCALE: 3/4" = 1'-0"

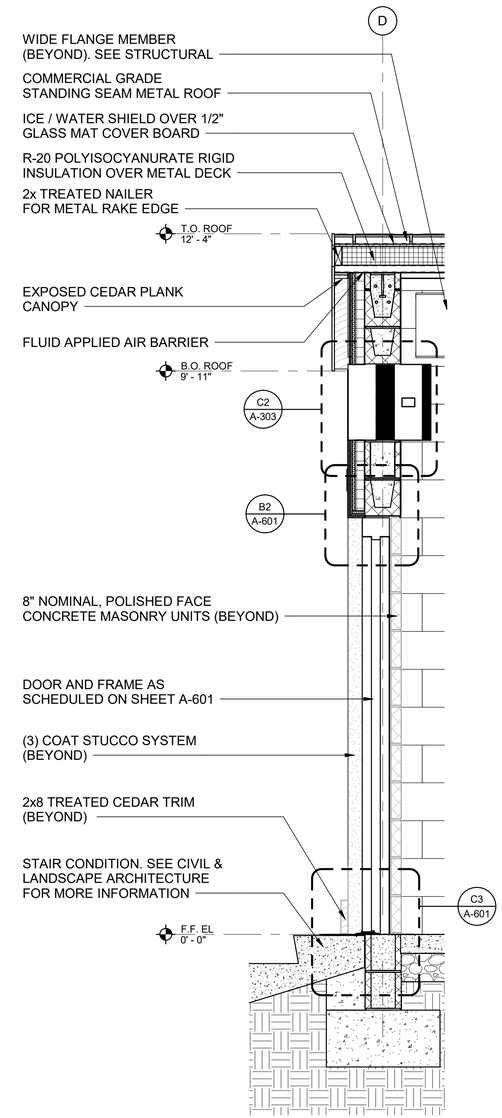

A5 SECTION AT REAR DOOR
SCALE: 3/4" = 1'-0"

1 0 1
SCALE: 1 1/2" = 1'-0"

1 0 1 2 3
SCALE: 3/4" = 1'-0"

SANDY SPRINGS GEORGIA

STATE OF GEORGIA MICHAEL LEE KATZIN GEORGIA CERT. NO. 0MR0001 REGISTERED ARCHITECT 10/11/2019
SEAL

MARK	DESCRIPTION	DATE
1	BID SET / CITY COMMENTS	2019.10.11
0	LDP SUBMITTAL	2019.09.24

ISSUE DATE: 10/11/19
SOLICITATION NO.: SOL-XX-X-XXXX
CONTRACT NO.: CONTRACT NUMBER
FILE NUMBER: XX-XXXX-XX
PLOT DATE: 10/11/19

DESIGNED BY: RJL
DWN BY: RJL
CKD BY: CLS
SUBMITTED BY:
FILE NAME:
SIZE: 22"x34"
PLOT SCALE:

CITY OF SANDY SPRINGS:
SANDY SPRINGS CITY HALL
1 GALAMBOS WAY
SANDY SPRINGS, GA 30328

POND
3600 Parkway Lane, Peachtree Corners, GA 30092 Suite 800
Phone (678) 338-7140
Fax (678) 338-7144
JOB NO. 1190708

HERITAGE PARK IMPROVEMENTS

WALL SECTIONS

SHEET IDENTIFICATION NUMBER
A-303

10/10/2019 4:59:28 PM C:\Users\locaminin\Documents\1190708_SS_Heritage_Park_ARCH_v19_LocaminiR.rvt

Copyright © 2019 by Pond & Company. All rights reserved. No copying or duplication of these documents is allowed without the express written agreement of Pond & Company.

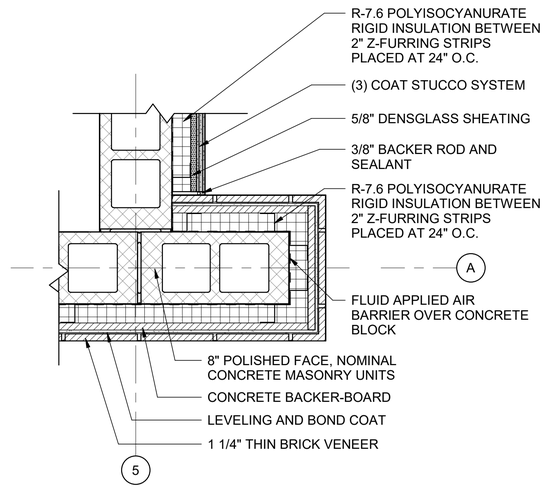

C2 CORNER CONNECTION DETAIL

SCALE: 1 1/2" = 1'-0"

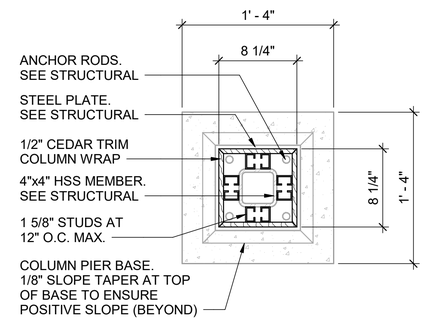

C3 COLUMN WRAP DETAIL

SCALE: 1 1/2" = 1'-0"

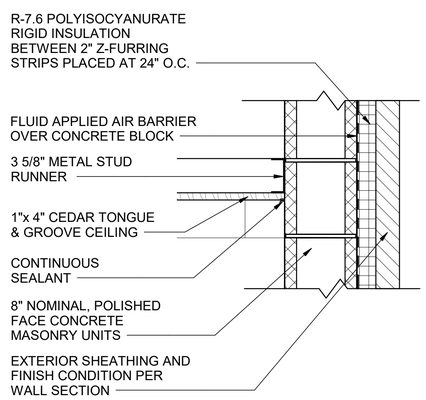

A2 CEILING CONNECTION DETAIL

SCALE: 1 1/2" = 1'-0"

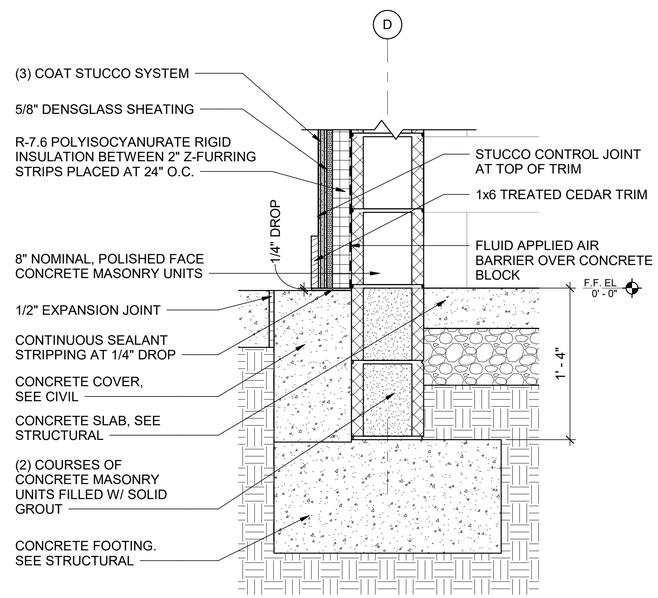

A3 DETAIL AT WALL BASE (TYP)

SCALE: 1 1/2" = 1'-0"

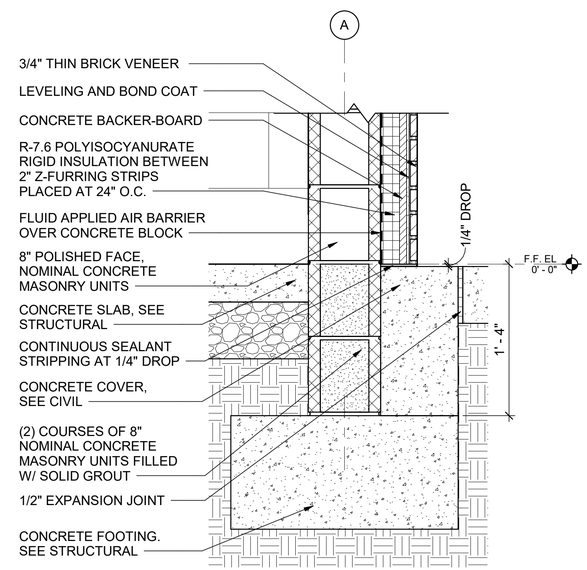

A4 DETAIL AT FRONT WALL BASE

SCALE: 1 1/2" = 1'-0"

1 0 1

SCALE: 1 1/2" = 1'-0"

SANDY SPRINGS GEORGIA

STATE OF GEORGIA MICHAEL LEE KATZIN GEORGIA CERT. NO. RA016511 REGISTERED ARCHITECT 10/11/2019

SEAL

MARK	DESCRIPTION	DATE
1	BID SET / CITY COMMENTS	2019.10.11
0	LDP SUBMITTAL	2019.09.24

DESIGNED BY: RJL
DWN BY: RJL
CKD BY: CLS
SUBMITTED BY:
FILE NAME:
SIZE: 22"X34"
PLOT SCALE:
ISSUE DATE: 10/11/19
SOLICITATION NO.: SOL-XX-X-XXXX
CONTRACT NO.: CONTRACT NUMBER
FILE NUMBER: XXX-XXXX
PLOT DATE: 10/11/19

CITY OF SANDY SPRINGS:
SANDY SPRINGS CITY HALL
1 GALAMBOS WAY
SANDY SPRINGS, GA 30328

POND
3500 Parkway Lane
Peachtree Corners, GA
30092 Suite 470
Phone (678) 336-7140
Fax (678) 336-7144

JOB NO. 1190708

HERITAGE PARK IMPROVEMENTS

SECTION & MISC. DETAILS

SHEET IDENTIFICATION NUMBER

A-304

10/10/2019 4:59:28 PM C:\Users\locamini\Documents\1190708_SS_Heritage_Park_ARCH_v19_LocaminiR.rvt

Copyright © 2019 by Pond & Company. All rights reserved. No copying or duplication of these documents is allowed without the express written agreement of Pond & Company.

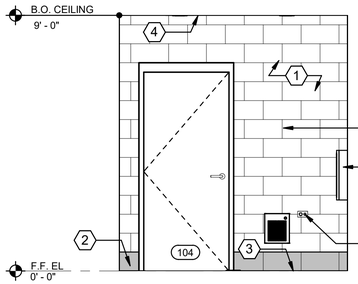

D1 INTERIOR ELEVATION - A

SCALE: 3/8" = 1'-0"

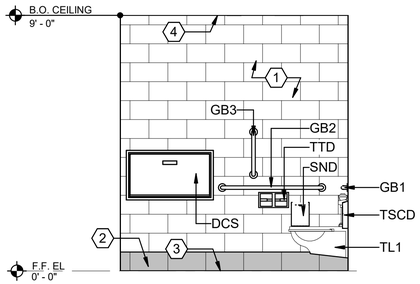

C3 INTERIOR ELEVATION - B

SCALE: 3/8" = 1'-0"

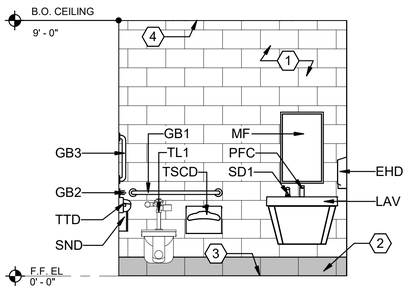

C1 INTERIOR ELEVATION - C

SCALE: 3/8" = 1'-0"

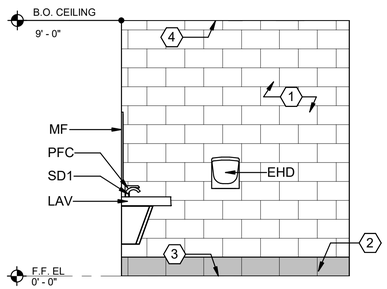

C2 INTERIOR ELEVATION - D

SCALE: 3/8" = 1'-0"

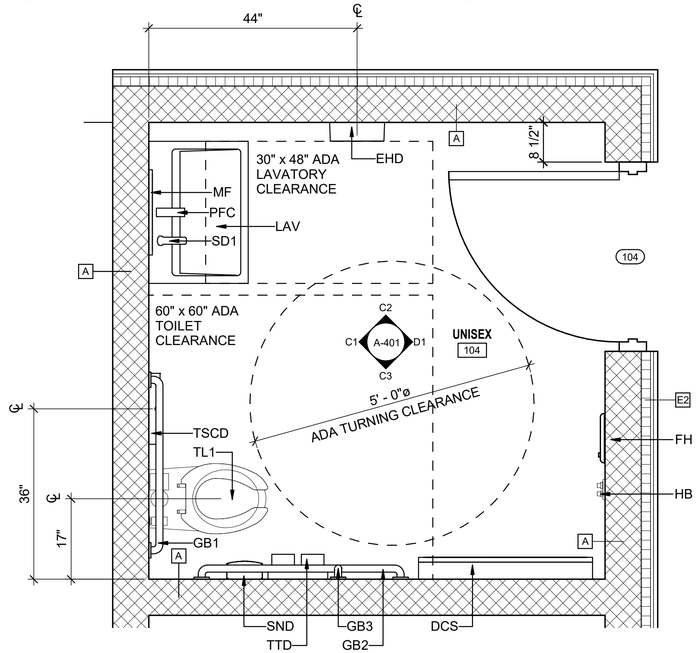

A1 ENLARGED FLOORPLAN - TYP

SCALE: 3/4" = 1'-0"

KEYNOTES:

(KEYNOTE NUMBERS ARE SHEET SPECIFIC AND NOT UNIFORM ACROSS ALL SHEETS)

FINISH CONDITION KEYNOTES

NOTE #	DESCRIPTION
1	POLISHED FACE CMU BLOCK
2	POLISHED FACE CMU BLOCK - ACCENT COURSING
3	SEALED CONCRETE FLOOR
4	1 x 4 CEDAR PANEL CEILING

RESTROOM FIXTURE SCHEDULE

KEYNOTE	DESCRIPTION
DCS	BRADLEY SS DIAPER CHANGING STATION - 962 11 MODEL
EHD	BRADLEY SS ELECTRIC HAND DRYER - MODEL 2923 287400
FH	FAN HEATER. REFER TO MECHANICAL
GB1	BRADLEY SS HEAVY DUTY HORZ. GRAB BAR - 36 INCH
GB2	BRADLEY SS HEAVY DUTY HORZ. GRAB BAR - 42 INCH
GB3	BRADLEY SS HEAVY DUTY VERT. GRAB BAR - 18 INCH
HB	HOSE BIBB. REFER TO PLUMBING
LAV	BRADLEY TERRION LAVATORY - VERGE LVAD1
MF	BRADLEY FRAMED MIRROR - 780 MODEL
PFC	AMERICAN STANDARD - NEXTGEN SELECTRONIC PROXIMITY FAUCET
SD1	BRADLEY SOAP DISPENSER - 6315 SENSOR OPERATED
SND	BRADLEY SS SANITARY NAPKIN DISPOSAL - 4A10 11 MODEL
TL1	AMERICAN STANDARD - AFWALL FLOWISE 5905.100 MODEL
TSCD	BRADLEY TOILET SEAT COVER DISPENSER - 5A40 MODEL
TTD	BRADLEY SS TIOLET TISSUE DISPENSER - 5426 11 MODEL

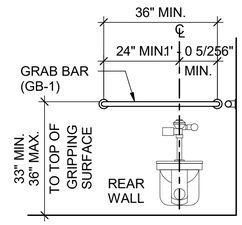

GRAB BAR (GB-1)

SCALE: 1/2"=1'-0"

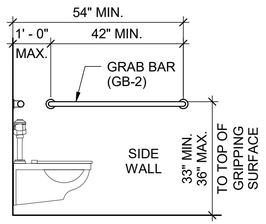

GRAB BAR (GB-2)

SCALE: 1/2"=1'-0"

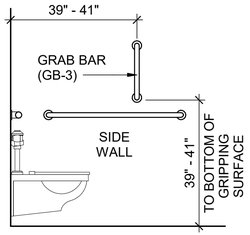

GRAB BAR (GB-3)

SCALE: 1/2"=1'-0"

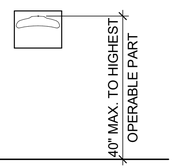

TOILET SEAT COVER DISPENSER (TSCD)

SCALE: 1/2"=1'-0"

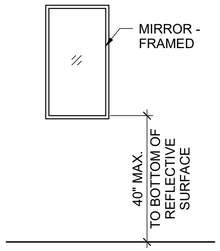

MIRROR - FRAMED (MF)

SCALE = 1/2" = 1'-0"

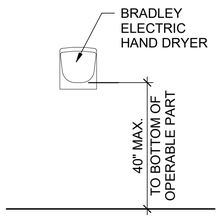

ELECTRIC HAND DRYER (EHD)

SCALE = 1/2" = 1'-0"

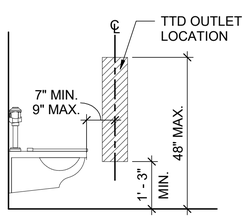

TOILET TISSUE DISPENSER (TTD)

SCALE: 1/2"=1'-0"

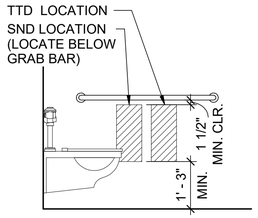

SANITARY NAPKIN DISPOSAL (SND)

SCALE: 1/2"=1'-0"

SHEET NOTES:

1. THIS SHEET INDICATES TYPICAL AND ACCESSIBLE MOUNTING HEIGHTS AND ADDITIONAL CRITERIA.
2. THE ACCESSIBLE CRITERIA INDICATED ON THIS SHEET ARE IN COMPLIANCE WITH THE ADA STANDARDS FOR ACCESSIBLE DEISGN (2010) AND THE ABA ACCESSIBILITY STANDARD FOR DEPARTMENT OF DEFENSE FACILITIES (2008).
3. DETAILS ON THIS SHEET INDICATING ACCESSIBLE REQUIREMENTS ARE MARKED WITH THE "INTERNATIONAL SYMBOL OF ACCESSIBILITY".
4. VERIFY MANUFACTURER'S RECOMMENDED ACCESSIBLE MOUNTING LOCATIONS WITH THOSE LISTED ON THIS SHEET.

"INTERNATIONAL SYMBOL OF ACCESSIBILITY"

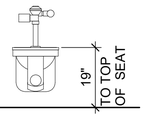

WALL MOUNTED TOILET (TL1)

SCALE: 1/2" = 1'-0"

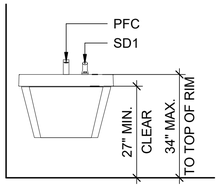

LAVATORY

SCALE: 1/2" = 1'-0"

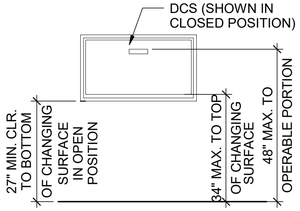

DIAPER CHANGING STATION (DCS)

SCALE: 1/2"=1'-0"

1 0 1 2 3

SCALE: 3/4" = 1'-0"

2 0 2 4 6

SCALE: 3/8" = 1'-0"

SANDY SPRINGS GEORGIA

STATE OF GEORGIA
MICHAEL LEE KATZIN
GEORGIA REG. NO. 0MR0001
REGISTERED ARCHITECT
SEAL

MARK	DESCRIPTION	DATE
1	BID SET / CITY COMMENTS	2019.10.11
0	LDP SUBMITTAL	2019.09.24

ISSUE DATE: 10/11/19
SOLICITATION NO.: SOL-XX-X-XXXX
CONTRACT NO.: CONTRACT NUMBER
FILE NUMBER: XX-XXXXX
PLOT DATE: 10/11/19
PLOT SCALE:

DESIGNED BY: RJL
DWN BY: RJL
CKD BY: CLS
SUBMITTED BY:
FILE NAME:
SIZE: 22"X34"

CITY OF SANDY SPRINGS:
SANDY SPRINGS CITY HALL
1 GALAMBOS WAY
SANDY SPRINGS, GA 30328

POND
3500 Parkway Lane
Peachtree Corners, GA
30092 Suite 170
Phone (678) 336-7140
Fax (678) 336-7144
JOB NO. 1190708

HERITAGE PARK IMPROVEMENTS

ENLARGED PLAN & ELEVATIONS

SHEET IDENTIFICATION NUMBER
A-401

10/10/2019 4:59:31 PM C:\Users\lucamin\Documents\1190708_SS_Heritage_Park_ARCH_v19_LucaminiR.rvt

Copyright © 2019 by Pond & Company. All rights reserved. No copying or duplication of these documents is allowed without the express written agreement of Pond & Company.

DOOR SCHEDULE												
	DOOR					FRAME						
MARK	TYPE	WIDTH	HEIGHT	MATERIAL	FINISH	TYPE	MATERIAL	FINISH	HEAD	JAMB	SILL	Comments
100	D01	3' - 0"	7' - 0"	HM	PT	F01	MTL	PT	B2/A-601	B2/A-601	C3/A-601	SEE SPECIFICATIONS FOR HARDWARE
101	D01	3' - 0"	7' - 0"	HM	PT	F01	MTL	PT	B2/A-601	B2/A-601	C3/A-601	SEE SPECIFICATIONS FOR HARDWARE
102	D01	3' - 0"	7' - 0"	HM	PT	F01	MTL	PT	B2/A-601	B2/A-601	C3/A-601	SEE SPECIFICATIONS FOR HARDWARE
103	D01	3' - 0"	7' - 0"	HM	PT	F01	MTL	PT	B2/A-601	B2/A-601	C3/A-601	SEE SPECIFICATIONS FOR HARDWARE
104	D01	3' - 0"	7' - 0"	HM	PT	F01	MTL	PT	B2/A-601	B2/A-601	C3/A-601	SEE SPECIFICATIONS FOR HARDWARE
105	D01	3' - 0"	7' - 0"	HM	PT	F01	MTL	PT	B2/A-601	B2/A-601	C3/A-601	SEE SPECIFICATIONS FOR HARDWARE
106	D01	3' - 0"	7' - 0"	HM	PT	F01	MTL	PT	B2/A-601	B2/A-601	C3/A-601	SEE SPECIFICATIONS FOR HARDWARE

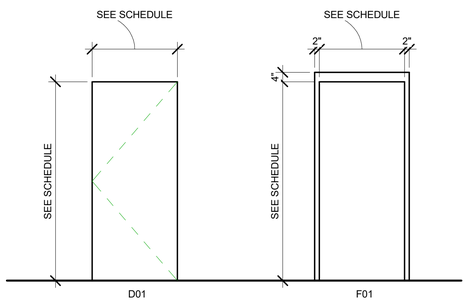

C1 DOOR & FRAME TYPES

SCALE: 3/8" = 1'-0"

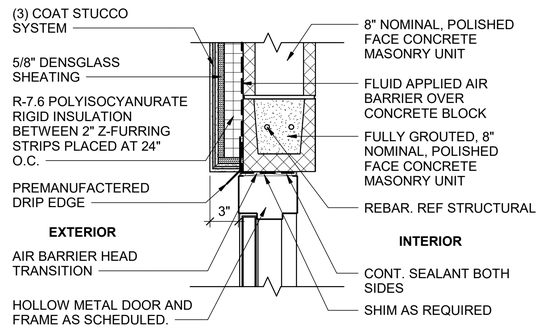

HEAD

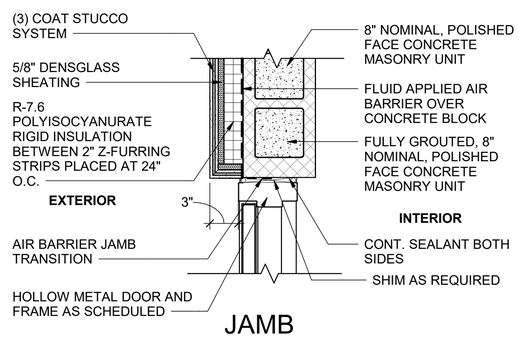

JAMB

B2 HEAD & JAMB DETAILS

SCALE: 1 1/2" = 1'-0"

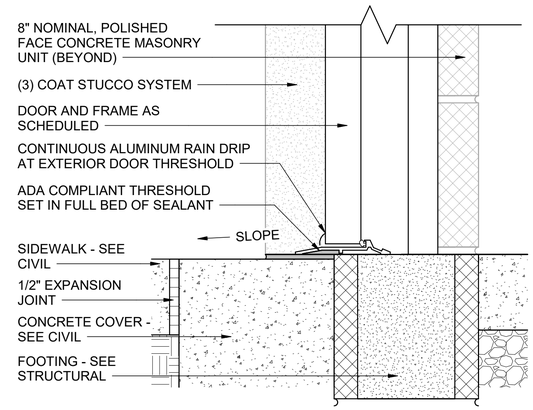

C3 SILL DETAIL

SCALE: 3" = 1'-0"

MATERIALS & FINISHES ABBREVIATIONS LIST

GR-1	GROUT (COOSA - OLD LIME PUTTY)
GR-2	DARK ACCENT GROUT (COOSA - PREMIUM DARK)
HM	HOLLOW METAL
MTL	METAL
PFC-1	POLISHED FACE CMU (CEMEX - PURE WHITE)
PFC-2	POLISHED FACE CMU DARK ACCENT COURSE (CEMEX - BLACK BEAUTY)
PT	PAINT
SC	SEALED CONCRETE
SS	SOLID SURFACE (BRADLEY CORP. - "GLACIER" TERRION)
WD	WOOD (LOCAL "GRAY" CEDAR)

BASIS OF DESIGN

MANUFACTURERS AND PRODUCTS INDICATED ARE BASIS OF DESIGN. FOR OTHER ACCEPTABLE MANUFACTURERS REFER TO SPECIFICATIONS.

FINISH SCHEDULE

SPACE		FLOOR		WALLS				CEILING	
ROOM NO.	ROOM NAME	MAT.	BASE	NORTH	EAST	SOUTH	WEST	FIN.	REMARKS
100	UTILITY CHASE	SC	PFC-2	PFC-1	PFC-1	PFC-1	PFC-1	WD	R1 & R2
101	UNISEX	SC	PFC-2	PFC-1	PFC-1	PFC-1	PFC-1	WD	R1 & R2
102	UNISEX	SC	PFC-2	PFC-1	PFC-1	PFC-1	PFC-1	WD	R1 & R2
103	UNISEX	SC	PFC-2	PFC-1	PFC-1	PFC-1	PFC-1	WD	R1 & R2
104	UNISEX	SC	PFC-2	PFC-1	PFC-1	PFC-1	PFC-1	WD	R1 & R2
105	UNISEX	SC	PFC-2	PFC-1	PFC-1	PFC-1	PFC-1	WD	R1 & R2
106	UNISEX	SC	PFC-2	PFC-1	PFC-1	PFC-1	PFC-1	WD	R1 & R2

REMARKS

R1. GR-1 TO BE USED WITH PFC-1
R2. GR-2 TO BE USED WITH PFC-2

0 1 — SCALE: 3" = 1'-0"
1 0 1 — SCALE: 1 1/2" = 1'-0"
2 0 2 4 6 — SCALE: 3/8" = 1'-0"

SANDY SPRINGS GEORGIA

STATE OF GEORGIA — MICHAEL LEE KATZIN — 10/4/2019 — GEORGIA NO. 0000000 — REGISTERED ARCHITECT — SEAL

MARK	DESCRIPTION	DATE
1	BID SET / CITY COMMENTS	2019.10.11
0	LDP SUBMITTAL	2019.09.24

ISSUE DATE: 10/11/19
SOLICITATION NO.: SOL-XX-X-XXXX
CONTRACT NO.: CONTRACT NUMBER
FILE NUMBER: XXX-XXXX
DESIGNED BY: RJL
DWN BY: RJL
CKD BY: CLS
SUBMITTED BY: CLS
FILE NAME:
SIZE: 22"X34"
PLOT SCALE: 1
PLOT DATE: 10/11/19

CITY OF SANDY SPRINGS:
SANDY SPRINGS CITY HALL
1 GALAMBOS WAY
SANDY SPRINGS, GA 30328

POND
3500 Parkway Lane
Peachtree Corners, GA 30092-2688
Phone (678) 336-7140
Fax (678) 336-7144
JOB NO. 1190708

HERITAGE PARK IMPROVEMENTS

DOOR DETAILS & FINISH SCHEDULE

SHEET IDENTIFICATION NUMBER
A-601

10/10/2019 4:59:32 PM C:\Users\locamini\Documents\1190708_SS_Heritage_Park_ARCH_v19_LocaminiR.rvt

Copyright © 2019 by Pond & Company. All rights reserved. No copying or duplication of these documents is allowed without the express written agreement of Pond & Company.

GENERAL STRUCTURAL NOTES:

A. GENERAL:

1. THE CONTRACTOR SHALL REVIEW ALL SUBMITTALS BEFORE THEY ARE PROVIDED TO THE OWNER AND STRUCTURAL ENGINEER. THE CONTRACTOR'S REVIEW SHALL BE DOCUMENTED WITHIN THE SUBMITTAL. THE OWNER AND STRUCTURAL ENGINEER RESERVE THE RIGHT TO REJECT SUBMITTALS THAT HAVE NOT BEEN FIRST REVIEWED BY THE CONTRACTOR. THE ACCURACY AND COMPLETENESS OF THE SUBMITTALS IS THE SOLE RESPONSIBILITY OF THE CONTRACTOR, INCLUDING ALL ERRORS AND OMISSIONS. IN ADDITION, THE CONTRACTOR IS SOLELY RESPONSIBLE FOR ALL MEANS, METHODS, AND SEQUENCING OF CONSTRUCTION.

2. THE GENERAL CONTRACTOR AND ALL SUBCONTRACTORS SHALL BE EXPERIENCED AND QUALIFIED TO PERFORM THE TYPE OF CONSTRUCTION REQUIRED TO COMPLETE THE WORK PRESCRIBED BY THE CONTRACT DOCUMENTS. THE CONTRACT DOCUMENTS WERE PREPARED AS A COMPLETE SET OF PROJECT DRAWINGS AND SPECIFICATIONS. IT IS THE GENERAL CONTRACTOR'S RESPONSIBILITY TO COORDINATE ALL INFORMATION PROVIDED IN THE CIVIL, ARCHITECTURAL, INTERIOR, MECHANICAL, ELECTRICAL, PLUMBING, AND FIRE PROTECTION DRAWINGS AND SPECIFICATIONS. THE CONTRACTOR SHALL NOTIFY THE OWNER AND ARCHITECT/ENGINEER IMMEDIATELY OF ANY CONFLICTS, OMISSIONS, OR DISCREPANCIES. THIS COORDINATION SHALL BE PERFORMED BEFORE THE PROCUREMENT OF MATERIALS AND/OR FABRICATION OF ANY PROJECT COMPONENTS.

3. WHERE SECTION IS SHOWN AND DETAILED, OTHER SECTIONS OF SIMILAR CONDITION SHALL BE DETAILED THE SAME OR OPPOSITE HAND, WHETHER SPECIFICALLY NOTED OR NOT.

4. COORDINATE SIZES AND LOCATIONS OF ALL FLOOR AND ROOF PENETRATIONS WITH PLUMBING, MECHANICAL, AND ARCHITECTURAL REQUIREMENTS.

5. ENGINEER'S APPROVAL MUST BE SECURED FOR ALL SUBSTITUTIONS. SUCH APPROVAL MAY ALSO BE WITHHELD AT THE SOLE DISCRETION OF THE ENGINEER.

6. THE STRUCTURES HAVE BEEN DESIGNED IN ACCORDANCE WITH THE PROVISIONS OF THE FOLLOWING:

   a. INTERNATIONAL BUILDING CODE, 2012 EDITION (IBC 2012) WITH GEORGIA AMENDMENTS

   b. AMERICAN SOCIETY OF CIVIL ENGINEERS, "MINIMUM DESIGN LOADS FOR BUILDINGS AND OTHER STRUCTURES," 2010 EDITION (ASCE 7-10).

7. THE CONTRACTOR SHALL PROVIDE TEMPORARY SHORING AND BRACING REQUIRED TO ERECT AND HOLD THE STRUCTURE IN PROPER ALIGNMENT UNTIL PERMANENT SUPPORTS AND LATERAL BRACING ARE IN PLACE.

8. DO NOT SCALE DRAWINGS, USE DIMENSIONS.

9. DESIGN LOADS USED IN THE DESIGN OF THE STRUCTURAL SYSTEMS IN THIS PROJECT ARE AS FOLLOWS:

   a. RISK CATEGORY — II

   b. DEAD LOAD:
      ROOF (NOT INCLUDING FRAMING SELF WT.) — 15 psf

   c. LIVE LOAD:
      ROOF — 20 psf (REDUCIBLE)
      SLAB-ON-GRADE — 100 psf

   d. ROOF SNOW LOAD:
      GROUND SNOW LOAD, p_g — 5 psf

   e. WIND DESIGN CRITERIA:
      EXPOSURE CATEGORY — B
      BASIC WIND SPEED, V — 115 mph (FACTORED, ULTIMATE LOAD); 90 MPH (UNFACTORED, SERVICE LOAD)
      INTERNAL PRESSURE COEFFICIENT, GC_p — ± 0.18
      INTERIOR WIND LOADING (PARTITIONS) — 5 psf (UNFACTORED, SERVICE LOAD)
      (SEE S-004 FOR WIND LOAD DIAGRAMS)

   f. SEISMIC DESIGN CRITERIA:
      SPECTRAL RESPONSE ACCELERATION:
      S_s (SHORT PERIOD (0.2 SECOND)) — 0.199 g
      S_1 (LONG PERIOD (1.0 SECOND)) — 0.093 g
      S_{DS} (SHORT PERIOD (0.2 SECOND)) — 0.213 g
      S_{D1} (LONG PERIOD (1.0 SECOND)) — 0.148 g
      SITE CLASS — CLASS D (ASSUMED)
      SEISMIC DESIGN CATEGORY — C
      LATERAL FORCE RESISTING SYSTEM — ORDINARY REINFORCED MASONRY SHEAR WALLS
      IMPORTANCE FACTOR, I_e — 1.00
      RESPONSE MODIFICATION COEFFICIENT, R — 2
      SEISMIC RESPONSE COEFFICIENT, C_s — 0.11
      ANALYSIS PROCEDURE: — EQUIVALENT LATERAL FORCE
      SEISMIC BASE SHEAR, V — 8 K

B. FOUNDATION

1. NO GEOTECHNICAL REPORT HAS BEEN PROVIDED AND PRESUMPTIVE LOAD BEARING VALUES PER SECTION 1804.2 IBC WERE USED FOR THIS PROJECT. FOUNDATIONS AND EARTH RETAINING STRUCTURES HAVE BEEN DESIGNED FOR A MAXIMUM ALLOWABLE SOIL BEARING PRESSURE OF 2000 psf.

2. PRIOR TO PLACING FOUNDATION CONCRETE, AND AFTER COMPACTION OF SUBGRADE, ALL FOUNDATION EXCAVATIONS SHALL BE INSPECTED AND TESTED BY A QUALIFIED GEOTECHNICAL TECHNICIAN. TESTING SHALL INCLUDE IN PLACE DENSITY TESTING, WHICH WILL REQUIRE ESTABLISHING THE OPTIMUM MOISTURE CONTENT OF THE SUBGRADE. IF THE SUBGRADE HAS LESS THAN THE STATED ALLOWABLE BEARING CAPACITY (SEE NOTE 1 ABOVE) THE WEAK SUBGRADE SHALL BE REMOVED, RECOMPACTED, AND RETESTED UNTIL IT IS SATISFACTORY AT NO ADDITIONAL COST TO THE OWNER. CONCRETE PLACEMENT SHALL NOT PROCEED UNTIL THE SUBGRADE MEETS THE MINIMUM DENSITY REQUIREMENTS BY GEOTECHNICAL ENGINEER.

3. WATER SHALL NOT BE ALLOWED TO ACCUMULATE IN EXCAVATIONS.

C. CAST-IN-PLACE CONCRETE

1. CAST-IN-PLACE CONCRETE FOR THIS PROJECT SHALL COMPLY WITH THE AMERICAN CONCRETE INSTITUTE (ACI) "BUILDING CODE REQUIREMENTS FOR REINFORCED CONCRETE AND COMMENTARY" ACI 318-14 AND ACI 318R-14.

2. REFERENCE PROJECT SPECIFICATION SECTION 03 30 00 "CAST-IN-PLACE CONCRETE."

3. CONCRETE SHALL HAVE THE FOLLOWING PROPERTIES:

AREA	STRENGTH @ 28 DAYS	AIR CONTENT	MAX. W/C RATIO
FOUNDATIONS	4,000 psi	< 6%	0.45
SLAB ON GRADE	4,000 psi	< 3%	0.45

4. ALL EXPOSED CONCRETE EDGES SHALL HAVE 3/4" CHAMFER, WHETHER SPECIFICALLY NOTED OR NOT.

5. TYPICAL SLAB FINISH SHALL BE BROOM FINISH FOR EXTERIOR SLABS AND STEEL TROWEL FINISH FOR INTERIOR SLABS.

   A. ALL EXTERIOR ANCHOR RODS SHALL BE GALVANIZED.

6. CONCRETE FORMWORK SHALL COMPLY WITH ACI 347, LATEST EDITION. CONTRACTOR SHALL BE RESPONSIBLE FOR THE DESIGN OF ALL FORMWORK.

   A. DURING AND IMMEDIATELY AFTER PLACING, CONCRETE SHALL BE THOROUGHLY COMPACTED BY SPADING OR MECHANICAL VIBRATING TO PROVIDE DENSE CONCRETE FREE OF HONEYCOMBING.

7. DIRECTLY AFTER FORMS HAVE BEEN REMOVED, ALL EXPOSED TIE WIRES AND STAPLED ENDS SHALL BE REMOVED FROM CONCRETE SURFACES TO BE EXPOSED. CUT TIES FLUSH WITH FINISHED SURFACES FOR ALL OTHER CONCRETE. RUB SMOOTH OR CUT OFF FINS AND ROUGH PLACES. REMOVE ALL LOOSE CONCRETE AND OTHER IRREGULARITIES. PATCH AND FILL VOIDS WITH BONDING AGENT AS REQUIRED.

8. ROUGHEN ALL CONSTRUCTION JOINTS TO A MINIMUM OF 1/4" AMPLITUDE UNLESS NOTED OTHERWISE.

D. CONCRETE REINFORCEMENT:

1. REINFORCING STEEL SHALL CONFORM TO ASTM A615 SUPPLEMENT SI, GRADE 60, OF DOMESTIC MANUFACTURER.

2. REINFORCEMENT SHALL BE FABRICATED TO SHAPES AND DIMENSIONS SHOWN AND SHALL CONFORM TO THE REQUIREMENTS OF CRSI AND ACI 318. REINFORCEMENT SHALL BE COLD BENT UNLESS OTHERWISE AUTHORIZED. BENDING MAY BE ACCOMPLISHED IN THE FIELD OR AT THE MILL. BARS SHALL NOT BE FIELD BENT WITHOUT THE APPROVAL OF THE ENGINEER.

3. REINFORCEMENT SHALL BE FREE FROM LOOSE RUST AND SCALE, DIRT, OIL, OR OTHER DELETERIOUS COATING THAT COULD REDUCE BOND WITH THE CONCRETE.

4. NO SPLICES OF REINFORCEMENT SHALL BE PERMITTED EXCEPT AS DETAILED OR AUTHORIZED. MAKE BARS CONTINUOUS AROUND CORNERS WITH CORNER BARS. WHERE PERMITTED, SPLICES MADE BY CONTACT LAPS SHALL BE CLASS "B" TENSION LAPS.

5. TENSION AND COMPRESSION REINFORCEMENT SPLICE LENGTHS IN CONCRETE SHALL BE DETERMINED AS FOLLOWS:

BAR SIZE	#3	#4	#5	#6	#7	#8	#9	#10	#11
TOP BAR SPLICE SIZE	28"	37"	47"	56"	81"	93"	105"	118"	131"
BOTTOM BAR SPLICE SIZE	22"	29"	36"	43"	63"	72"	81"	91"	101"

   a. TOP BARS ARE HORIZONTAL BARS WITH MORE THAN 12" OF CONCRETE CAST BELOW THE BARS.

   b. THE TABLE ABOVE IS BASED ON A CONCRETE COVER AT LEAST EQUAL TO THE BAR DIAMETER AND A CENTER TO CENTER BAR SPACING AT LEAST EQUAL TO 3 TIMES THE BAR DIAMETER. MULTIPLY THE ABOVE LENGTHS BY 1.5 WHERE THESE CONDITIONS DO NOT EXIST.

6. WHERE HOOKS ARE SHOWN, PROVIDE STANDARD 90 DEGREE HOOKS IN ACCORDANCE WITH CRSI AND ACI 318, UNLESS NOTED OTHERWISE.

7. WHERE REQUIRED, PROVIDE DOWELS TO MATCH SIZE AND SPACING OF VERTICAL REINFORCING FROM FOUNDATION. DOWELS SHALL HAVE STANDARD 90 DEGREE HOOKS.

8. MINIMUM CONCRETE REINFORCING COVER REQUIREMENTS:

EXPOSURE	CONST. TYPE	BAR SIZE	MINIMUM COVER
CONCRETE CAST AGAINST EARTH:	ALL	ALL	3"
FORMED CONCRETE EXPOSED TO EARTH OR WEATHER:	WALLS, SLABS	#6 BAR AND LARGER	2"
		#5 BAR AND SMALLER	1 1/2"
FORMED CONCRETE NOT EXPOSED TO WEATHER OR IN CONTACT WITH GROUND:	WALLS, SLABS	#11 BAR AND SMALLER	3/4"

9. ALL REINFORCING STEEL AND EMBEDDED ITEMS SUCH AS ANCHOR RODS AND WELD PLATES SHALL BE PLACED TO PREVENT DISPLACEMENT BEYOND PERMITTED TOLERANCES.

10. DETAIL BARS IN ACCORDANCE WITH "ACI DETAILING MANUAL-2004," PUBLICATION SP-66, ACI 318, AND ACI 315, OR LATEST EDITIONS.

11. PROVIDE ACCESSORIES NECESSARY TO PROPERLY SUPPORT REINFORCING AT POSITIONS SHOWN ON PLANS.

12. WELDING OF REINFORCEMENT IS NOT PERMITTED.

E. CONCRETE MASONRY:

1. CONCRETE MASONRY UNITS SHALL CONFORM TO ASTM C90, TYPE II, TWO CELL UNITS, AND BE MADE WITH LIGHT WEIGHT AGGREGATE. THE COMPRESSIVE STRENGTH OF MASONRY, f'm, EXPRESSED AS FORCE PER UNIT OF NET CROSS-SECTIONAL AREA, SHALL BE 1500 psi AT 28 DAYS.

2. REINFORCING STEEL SHALL COMPLY WITH ASTM A615, GRADE 60. SHOP FABRICATE REINFORCING BARS WHICH ARE SHOWN TO BE HOOKED.

3. GROUT SHALL COMPLY WITH ASTM C476, AND SHALL BE PROPORTIONED TO OBTAIN A 28 DAY COMPRESSIVE STRENGTH OF 2000 psi.

4. MORTAR SHALL COMPLY WITH ASTM C270, TYPE S. AGGREGATE FOR MORTAR SHALL COMPLY WITH ASTM C144. AGGREGATE FAILING TO COMPLY WITH ASTM C144 GRADATION REQUIREMENTS MAY BE USED PROVIDED THE MORTAR CAN BE PREPARED TO COMPLY WITH THE AGGREGATE RATIO, WATER RETENTION, AND COMPRESSIVE STRENGTH REQUIREMENTS OF THE PROPERTY SPECIFICATIONS ASTM C270.

5. PROVIDE VERTICAL REINFORCING BARS OF THE GIVEN SIZE AND SPACING SHOWN ON THE DRAWINGS. TENSION AND COMPRESSION REINFORCEMENT SPLICE LENGTHS IN GROUT SHALL BE DETERMINED AS FOLLOWS:
   #4 BARS - 28"
   #5 BARS - 35"
   #6 BARS - 46"
   #7 BARS - 63"

6. SEE MASONRY WALL DETAILS ON S-502 FOR REINFORCEMENT REQUIRED ON EACH SIDE OF ALL OPENINGS, CONTROL JOINTS, AND AT CORNERS AND INTERSECTIONS OF ALL MASONRY WALLS, BOTH BEARING AND NONBEARING WALLS.

7. PROVIDE REBAR DOWELS FROM THE FOUNDATION OF THE SAME SIZE AND SPACING AS VERTICAL REINFORCING. DOWELS SHALL HAVE STANDARD ACI HOOKS. DOWELS SHALL HAVE A MINIMUM LAP AS SHOWN ON THE DRAWINGS.

8. PROVIDE STANDARD 9 GAUGE HORIZONTAL LADDER TYPE JOINT REINFORCING IN CMU WALLS AT 16" ON CENTER AND IN TWO JOINTS IMMEDIATELY ABOVE AND BELOW ALL OPENINGS, EXTENDING A MINIMUM OF 2'-0" OR 48 BAR DIAMETERS, WHICHEVER IS GREATER, BEYOND THE JAMB ON EACH SIDE OF THE OPENING, EXCEPT AT CONTROL JOINTS.

9. PROVIDE HORIZONTAL BOND BEAMS WITH CONTINUOUS REINFORCING AS SHOWN IN THE SECTIONS AND DETAILS. DISCONTINUE ALL HORIZONTAL REINFORCING AT CONTROL JOINTS EXCEPT FOR THE BOND BEAM AT THE TOP OF THE WALL. INTERMEDIATE BOND BEAMS SHALL BE PROVIDED AS SHOWN.

10. FILL ALL REINFORCED CELLS AND ALL CELLS BELOW GRADE WITH GROUT.

11. PROVIDE CONTROL JOINTS WHERE SHOWN ON ARCHITECTURAL WALL ELEVATIONS. USE STANDARD CONTROL JOINT UNITS WITH FACTORY FABRICATED CONTROL JOINT KEYS.

12. PROVIDE 8" BOND BEAM (MINIMUM DEPTH UNLESS NOTED OTHERWISE) AT TOP OF ALL CMU WALLS AND OVER OPENINGS. REINFORCE BOND BEAM WITH 2 - #4 BARS. DISCONTINUE ALL HORIZONTAL REINFORCING AT CONTROL JOINTS. REFER TO ARCHITECTURAL, MECHANICAL, ELECTRICAL, AND PLUMBING DRAWINGS FOR LOCATIONS OF OPENINGS.

F. STRUCTURAL STEEL:

1. STRUCTURAL STEEL FOR THIS PROJECT HAS BEEN DESIGNED IN ACCORDANCE WITH THE FOURTEENTH EDITION OF THE AMERICAN INSTITUTE OF STEEL CONSTRUCTION (AISC) "STEEL CONSTRUCTION MANUAL."

2. STRUCTURAL STEEL SHALL COMPLY WITH THE FOLLOWING SPECIFICATIONS:

COMPONENT TYPE	STANDARD	YIELD STRENGTH
a. STRUCTURAL STEEL WIDE FLANGE SHAPES:	ASTM A992	Fy = 50 ksi
b. OTHER STRUCTURAL STEEL SHAPES, PLATES, AND BARS:	ASTM A36	Fy = 36 ksi
c. HOLLOW STRUCTURAL SECTIONS (HSS):	ASTM A500 (GRADE C)	Fy = 50 ksi
d. STEEL PIPE:	ASTM A53 (GRADE B)	Fy = 35 ksi
e. ANCHOR RODS:	ASTM F1554	Fy = 36 ksi

3. WELDING SHALL BE IN ACCORDANCE WITH AWS D1.1, "STRUCTURAL WELDING CODE - STEEL," LATEST EDITION. WELD ELECTRODES SHALL BE E70XX. PROVIDE 1/4" CONTINUOUS FILLET WELDS UNLESS NOTED OTHERWISE.

4. EXPOSED EXTERIOR METAL INCLUDING ALL EXTERIOR METAL FABRICATIONS SHALL BE SHOP FABRICATED, PRIMED, AND PAINTED IN ACCORDANCE WITH SPECIFICATION 09 90 00 "PAINTS AND COATINGS."

SANDY SPRINGS GEORGIA

GEORGIA REGISTERED No. PE044592 PROFESSIONAL ENGINEER BENJAMIN ORELLIN
SEAL

MARK	DESCRIPTION	DATE
1	Bid Set	10.14.2019
0	Land Disturbance Permit	09.24.2019

ISSUE DATE: SEP 24 2019
SOLICITATION NO.:
CONTRACT NO.:
FILE NUMBER:
PLOT DATE:
DESIGNED BY: KP
DWN BY: KP
CKD BY: KP
SUBMITTED BY: BJ
FILE NAME:
PLOT SCALE:
SIZE: 22"X34"

CITY OF SANDY SPRINGS:
SANDY SPRINGS CITY HALL
1 GALAMBOS WAY
SANDY SPRINGS, GA 30328

POND
3600 Parkway Lane
Peachtree Corners, GA
Suite 200 30092
Phone (678) 338-7140
Fax (678) 338-7144

JOB NO. 1190708

HERITAGE PARK IMPROVEMENTS

GENERAL STRUCTURAL NOTES

SHEET IDENTIFICATION NUMBER
S-001

Copyright © 2019 by Pond & Company. All rights reserved. No copying or duplication of these documents is allowed without the express written agreement of Pond & Company.

10/14/2019 3:32:00 PM C:\Users\parkk\Documents\1190708_SS_Heritage_Park_Struct_v19_parkk@pondco.com.rvt

GENERAL STRUCTURAL NOTES (CONT.):

G. STEEL DECK:

1. DESIGN, FABRICATION, AND INSTALLATION OF ALL STEEL ROOF DECK SHALL BE IN ACCORDANCE WITH AISC AND SDI SPECIFICATIONS.
2. ROOF DECK SHALL BE VULCRAFT, DIV. NUCOR TYPE 1 1/2", WIDE RIB, 20 GAUGE METAL DECK (OR APPROVED EQUAL) AND SHALL BE GALVANIZED.
3. ATTACH METAL DECK AT ROOF TO SUPPORTS USING #12 TEK SCREWS IN A 36/4 PATTERN. PROVIDE #10 TEK SCREWS AT SIDELAPS AND #12 TEK SCREWS AT EDGE SUPPORTS AT 1'-0" O.C.
4. PUDDLE WELDING OR PINS ARE NOT ACCEPTABLE FOR DECK ATTACHMENT.
5. PROVIDE A 1 1/2" MINIMUM END BEARING FOR METAL DECK SUPPORTS.
6. INSTALL DECK IN THREE SPAN LENGTHS MINIMUM.

H. POST INSTALLED ANCHORS:

1. ALL POST INSTALLED ANCHORS SHALL BE INSTALLED WITH THE PRODUCT DIAMETER AND EMBEDMENT SHOWN IN THE DETAILS.
2. INSTALL PRODUCTS IN ACCORDANCE WITH MANUFACTURER'S PRINTED INSTALLATION INSTRUCTIONS. CONTRACTOR SHALL CONTACT MANUFACTURER'S REPRESENTATIVE FOR PRODUCT INSTALLATION TRAINING.
3. REFER TO THE PROJECT BUILDING CODE AND/OR EVALUATION REPORT FOR SPECIAL INSPECTIONS AND PROOF LOAD REQUIREMENTS.
4. THREADED RODS SHALL HAVE A MINIMUM YIELD STRENGTH OF 36 ksi.
5. SUBSTITUTION REQUESTS FOR PRODUCTS OTHER THAN THOSE LISTED BELOW MAY BE SUBMITTED BY THE CONTRACTOR TO THE ENGINEER OF RECORD FOR REVIEW. SUBSTITUTIONS WILL ONLY BE CONSIDERED FOR PRODUCTS HAVING A RESEARCH REPORT RECOGNIZING THE PRODUCT FOR THE APPROPRIATE APPLICATION UNDER THE PRODUCT BUILDING CODE. SUBSTITUTION REQUESTS SHALL INCLUDE CALCULATIONS THAT DEMONSTRATE THE SUBSTITUTED PRODUCT IS CAPABLE OF ACHIEVING THE EQUIVALENT PERFORMANCE VALUES OF THE DESIGN BASIS PRODUCT.
6. ADHESIVE ANCHORS SHALL HAVE BEEN TESTED IN ACCORDANCE WITH ACI 355.4 AND ICC-ES AC308 FOR CRACKED CONCRETE AND SEISMIC APPLICATIONS. DESIGN ADHESIVE BOND STRENGTH HAS BEEN BASED ON ACI 355.4 TEMPERATURE CATEGORY B WITH INSTALLATIONS INTO DRY HOLES DRILLED USING A CARBIDE DRILL BIT INTO CRACKED CONCRETE THAT HAS CURED FOR AT LEAST 21 DAYS. ADHESIVE ANCHORS REQUIRING CERTIFIED INSTALLATIONS SHALL BE INSTALLED BY A CERTIFIED ADHESIVE ANCHOR INSTALLER PER ACI 318-14 D.9.2.2. INSTALLATIONS REQUIRING CERTIFIED INSTALLERS SHALL BE INSPECTED PER ACI 318-14 D.9.2.4. PRE-APPROVED PRODUCTS INCLUDE:

	MANUFACTURER	PRODUCT	ICC REPORT
BASIS OF DESIGN	HILTI	HIT-RE 500-SD WITH THREADED ROD	ESR-2322
PRE-APPROVED ALTERNATE ANCHORS	HILTI	HIT-HY 200R WITH HIT-Z ANCHORS	ESR-3187
	SIMPSON STRONG-TIE	SET-XP WITH THREADED ROD	ESR-2508
	POWERS FASTENERS	PE1000+ WITH THREADED ROD	ESR-2583

I. SPECIAL INSPECTIONS:

1. QUALIFIED SPECIAL INSPECTORS SHALL BE RETAINED TO PERFORM INSPECTIONS REQUIRED BY THE BUILDING CODE. SEE SHEETS S-003 FOR THE SPECIAL INSPECTIONS SCHEDULES.
2. ANY FIELD OBSERVATIONS OR OTHER WORK PROGRESS REVIEW PERFORMED BY THE STRUCTURAL ENGINEER SHALL NOT BE CONSTRUED AS A SPECIAL INSPECTION.

ABBREVIATION KEY

@	AT	L.L.	LIVE LOAD
ARCH	ARCHITECTURAL	LLH	LONG LEG HORIZONTAL
B/	BOTTOM OF	LLV	LONG LEG VERTICAL
BLDG	BUILDING	MAX.	MAXIMUM
BM	BEAM	MECH.	MECHANICAL
BTM.	BOTTOM	MFR.	MANUFACTURER
C.L.	CENTERLINE	MIN.	MINIMUM
CIP	CAST-IN-PLACE	mph	MILES PER HOUR
CJ	CONTROL JOINT	N/A	NOT APPLICABLE
CLR.	CLEAR	N.I.C.	NOT IN CONTRACT
CMU	CONCRETE MASONRY UNIT	N.S.	NEAR SIDE
COL.	COLUMN	N.T.S.	NOT TO SCALE
CONC.	CONCRETE	O/O	OUT TO OUT
CONST.	CONSTRUCTION	O.C.	ON CENTER
CONT.	CONTINUOUS	OPN'G	OPENING
DEG.	DEGREE	OPP.	OPPOSITE
DIA.	DIAMETER	PEMB	PRE-ENGINEERED METAL BUILDING SYSTEM
D.L.	DEAD LOAD		
DWG.	DRAWING	PL.	PLATE
DWL.	DOWEL	PJF	PRE-MOLDED JOINT FILLER
E.E.	EACH END	PROJ.	PROJECTION
E.F.	EACH FACE	PTB	POST-TENSION BEAM
ELEC.	ELECTRICAL	psf	POUNDS PER SQUARE FOOT
ELEV.	ELEVATION	psi	POUNDS PER SQUARE INCH
E.O.R.	ENGINEER OF RECORD	RCB	REINFORCED CONCRETE BEAM
E.O.S.	EDGE OF SLAB	REINF.	REINFORCEMENT
EQ.	EQUAL	REQ'D	REQUIRED
E.S.	EACH SIDE	SDSTSMS	SELF-DRILLING, SELF-TAPPING SHEET METAL SCREWS
E.W.	EACH WAY		
EXIST.	EXISTING	S.F.	SQUARE FOOT
EXP.	EXPANSION	SIM.	SIMILAR
EXT.	EXTERIOR	SQ.	SQUARE
FD	FLOOR DRAIN	STD.	STANDARD
FDN.	FOUNDATION	STL.	STEEL
F.P.	FLOOR PENETRATION	S.W.	SELF-WEIGHT
F.F.	FINISH FLOOR	T&B	TOP AND BOTTOM
F.S.	FAR SIDE	T/	TOP OF
FT.	FEET	THRD'D	THREADED
FTG	FOOTING	TOS	TOP OF STEEL
HK.	HOOK	TYP.	TYPICAL
HOR.	HORIZONTAL	U.N.O.	UNLESS NOTED OTHERWISE
H.S.	HEADED STUD	VERT.	VERTICAL
HSS	HOLLOW STRUCTURAL SECTION	w/	WITH
HT.	HEIGHT	W/C	WATER TO CEMENT
HVY.	HEAVY	WF	WIDE FLANGE
IN.	INCH	W.L.	WIND LOAD
INT.	INTERIOR	W.P.	WORKING POINT
K	KIPS	WT.	WEIGHT
ksi	1,000 POUNDS PER SQUARE INCH	WWR	WELDED WIRE REINFORCEMENT
lb	POUNDS		

SANDY SPRINGS GEORGIA

GEORGIA REGISTERED No. PE044592 PROFESSIONAL ENGINEER BENJAMIN ORELLIN 10/14/19

SEAL

MARK	DESCRIPTION	DATE
1	Bid Set	10.14.2019
0	Land Disturbance Permit	09.24.2019

ISSUE DATE: SEP.24.2019
SOLICITATION NO.:
CONTRACT NO.:
FILE NUNBER:
PLOT DATE:

DESIGNED BY: KP
DWN BY: KP
CKD BY: KP
SUBMITTED BY: BJ
FILE NAME:
SIZE: 22"X34"
PLOT SCALE:

CITY OF SANDY SPRINGS:
SANDY SPRINGS CITY HALL
1 GALAMBOS WAY
SANDY SPRINGS, GA 30328

POND
3600 Parkway Lane
Peachtree Corners, GA 30092-2880
Phone (678) 338-7140
Fax (678) 338-7144

JOB NO. 1190708

HERITAGE PARK IMPROVEMENTS

GENERAL STRUCTURAL NOTES

SHEET IDENTIFICATION NUMBER

S-002

Copyright © 2019 by Pond & Company. All rights reserved. No copying or duplication of these documents is allowed without the express written agreement of Pond & Company.

10/14/2019 3:32:00 PM C:\Users\parkk\Documents\1190708_SS_Heritage_Park_Struct_v19_parkk@pondco.com.rvt

1705.2 STEEL CONSTRUCTION

MATERIAL / ACTIVITY	SERVICE	EXTENT
1. FABRICATOR AND ERECTOR DOCUMENTS (VERIFY REPORTS AND CERTIFICATES AS LISTED IN AISC 360, CHAPTER N, PARAGRAPH 3.2 FOR COMPLIANCE WITH CONSTRUCTION DOCUMENTS)	SUBMITTAL REVIEW	EACH SUBMITTAL
2. MATERIAL VERIFICATION OF STRUCTURAL STEEL	SHOP AND FIELD INSPECTION	PERIODIC
3. EMBEDMENTS (VERIFY DIAMETER, GRADE, TYPE, LENGTH, EMBEDMENT. SEE 1705.3 FOR ANCHORS)	FIELD INSPECTION	PERIODIC
4. VERIFY MEMBER LOCATIONS, BRACES, STIFFENERS, AND APPLICATION OF JOINT DETAILS AT EACH CONNECTION COMPLY WITH CONSTRUCTION DOCUMENTS	FIELD INSPECTION	PERIODIC
5. STRUCTURAL STEEL WELDING:		
a. INSPECTION TASKS PRIOR TO WELDING (OBSERVE, OR PERFORM FOR EACH WELDED JOINT OR MEMBER, THE QA TASKS LISTED IN AISC 360, TABLE N5.4-1)	SHOP AND FIELD INSPECTION	OBSERVE OR PERFORM AS NOTED
b. INSPECTION TASKS DURING WELDING (OBSERVE, OR PERFORM FOR EACH WELDED JOINT OR MEMBER, THE QA TASKS LISTED IN AISC 360, TABLE N5.4-2)	SHOP AND FIELD INSPECTION	OBSERVE
c. INSPECTION TASKS AFTER WELDING (OBSERVE, OR PERFORM FOR EACH WELDED JOINT OR MEMBER, THE QA TASKS LISTED IN AISC 360, TABLE N5.4-3)	SHOP AND FIELD INSPECTION	OBSERVE OR PERFORM AS NOTED
d. NONDESTRUCTIVE TESTING (NDT) OF WELDED JOINTS: SEE COMMENTARY		
1.) COMPLETE PENETRATION GROOVE WELDS 5/16" OR GREATER IN RISK CATEGORY II	SHOP OR FIELD ULTRASONIC TESTING - 10% OF WELDS MINIMUM	PERIODIC
2.) THERMALLY CUT SURFACES OF ACCESS HOLES WHEN MATERIAL t > 2"	SHOP OR FIELD MAGNETIC PARTICLE OR PENETRANT TESTING	PERIODIC
3.) FABRICATOR'S NDT REPORTS WHEN FABRICATOR PERFORMS NDT	VERIFY REPORTS	EACH SUBMITTAL
6. STRUCTURAL STEEL BOLTING:	SHOP AND FIELD INSPECTION	
a. INSPECTION TASKS PRIOR TO BOLTING (OBSERVE, OR PERFORM TASKS FOR EACH BOLTED CONNECTION, IN ACCORDANCE WITH QA TASKS LISTED IN AISC 360, TABLE N5.6-1)		OBSERVE OR PERFORM AS NOTED
b. INSPECTION TASKS DURING BOLTING (OBSERVE THE QA TASKS LISTED IN AISC 360, TABLE N5.6-2)		OBSERVE
1.) PRE-TENSIONED AND SLIP-CRITICAL JOINTS		
a.) TURN-OF-NUT WITH MATCHING MARKINGS		PERIODIC
b.) DIRECT TENSION INDICATOR		PERIODIC
c.) TWIST-OFF TYPE TENSION CONTROL BOLT		PERIODIC
d.) TURN-OF-NUT WITHOUT MATCHING MARKINGS		CONTINUOUS
e.) CALIBRATED WRENCH		CONTINUOUS
2.) SNUG-TIGHT JOINTS		PERIODIC
c. INSPECTION TASKS AFTER BOLTING (PERFORM TASKS FOR EACH BOLTED CONNECTION IN ACCORDANCE WITH QA TASKS LISTED IN AISC 360, TABLE N5.6-3)		PERFORM

1705.2.2 STEEL CONSTRUCTION OTHER THAN STRUCTURAL STEEL

MATERIAL / ACTIVITY	SERVICE	EXTENT
1. MATERIAL VERIFICATION OF COLD-FORMED STEEL DECK:		
a. IDENTIFICATION MARKINGS TO CONFORM TO ASTM STANDARDS SPECIFIED IN THE APPROVED CONSTRUCTION DOCUMENTS	FIELD INSPECTION	PERIODIC
b. MANUFACTURER'S CERTIFIED TEST REPORTS	SUBMITTAL REVIEW	EACH SUBMITTAL
2. INSPECTION OF WELDING		
a. COLD-FORMED STEEL DECK		
ROOF DECK WELDS		PERIODIC

1705.3 CONCRETE CONSTRUCTION

MATERIAL / ACTIVITY	SERVICE	EXTENT
1. INSPECTION OF REINFORCING STEEL AND PLACEMENT	SHOP AND FIELD INSPECTION	PERIODIC
2. INSPECTION OF ANCHORS CAST IN CONCRETE WHERE ALLOWABLE LOADS HAVE BEEN INCREASED OR WHERE STRENGTH DESIGN IS USED	SHOP AND FIELD INSPECTION	PERIODIC
3. INSPECTION OF ANCHORS POST-INSTALLED IN HARDENED CONCRETE MEMBERS[b]	SHOP AND FIELD INSPECTION	PERIODIC
4. VERIFY USE OF REQUIRED DESIGN MIX	SHOP AND FIELD INSPECTION	PERIODIC
5. AT THE TIME FRESH CONCRETE IS SAMPLED TO FABRICATE SPECIMENS FOR STRENGTH TESTS, PERFORM SLUMP AND AIR CONTENT TESTS, AND DETERMINE THE TEMPERATURE OF THE CONCRETE	SHOP AND FIELD INSPECTION	CONTINUOUS
6. INSPECTION OF CONCRETE AND SHOTCRETE PLACEMENT FOR PROPER APPLICATION TECHNIQUES	SHOP AND FIELD INSPECTION	CONTINUOUS
7. INSPECTION FOR MAINTENANCE OF SPECIFIED CURING TEMPERATURE AND TECHNIQUES	SHOP AND FIELD INSPECTION	PERIODIC
8. VERIFICATION OF IN-SITU CONCRETE STRENGTH PRIOR TO REMOVAL OF SHORES AND FORMS FROM STRUCTURAL SLABS.	REVIEW FIELD TESTING AND LABORATORY REPORTS	PERIODIC
9. INSPECT FORMWORK FOR SHAPE, LOCATION, AND DIMENSIONS FOR THE CONCRETE MEMBER TO BE FORMED	FIELD INSPECTION	PERIODIC

NOTES:

a. WHERE APPLICABLE, SEE ALSO SECTION 1705.11 SPECIAL INSTRUCTIONS FOR SEISMIC RESISTANCE.

b. SPECIFIC REQUIREMENTS FOR SPECIAL INSPECTION SHALL BE INCLUDED IN THE RESEARCH REPORT FOR THE ANCHOR ISSUED BY AN APPROVED SOURCE IN ACCORDANCE WITH ACI 355.2 OR OTHER QUALIFICATIONS PROCEDURES. WHERE SPECIFIC REQUIREMENTS ARE NOT PROVIDED, SPECIAL INSPECTION REQUIREMENTS SHALL BE SPECIFIED BY THE REGISTERED DESIGN PROFESSIONAL AND SHALL BE APPROVED BY THE BUILDING OFFICIAL PRIOR TO THE COMMENCEMENT OF THE WORK.

1705.4 MASONRY CONSTRUCTION

MATERIAL / ACTIVITY	SERVICE	EXTENT
1. VERIFICATION OF SLUMP FLOW AND VISUAL STABILITY INDEX (VSI) OF SELF-CONSOLIDATING GROUT AS DELIVERED TO THE PROJECT	FIELD INSPECTION	CONTINUOUS
2. VERIFY COMPLIANCE WITH APPROVED SUBMITTALS	FIELD INSPECTION	PERIODIC
3. VERIFY PROPORTIONS OF SITE-MIXED MORTAR, GROUT, AND PRE-STRESSING GROUT FOR BONDED TENDONS	FIELD INSPECTION	PERIODIC
4. VERIFY GRADE, TYPE, AND SIZE OF REINFORCEMENT AND ANCHOR BOLTS	FIELD INSPECTION	PERIODIC
5. VERIFY CONSTRUCTION OF MORTAR JOINTS	FIELD INSPECTION	PERIODIC
6. VERIFY PLACEMENT OF REINFORCEMENT, CONNECTORS AND ANCHORAGES	FIELD INSPECTION	LEVEL B - PERIODIC
7. VERIFY GROUT SPACE PRIOR TO GROUTING	FIELD INSPECTION	LEVEL B - PERIODIC
8. VERIFY SIZE AND LOCATION OF STRUCTURAL MASONRY ELEMENTS	FIELD INSPECTION	PERIODIC
9. VERIFY TYPE, SIZE, AND LOCATION OF ANCHORS, INCLUDING DETAILS OF ANCHORAGE OF MASONRY TO STRUCTURAL MEMBERS, FRAMES OR OTHER CONSTRUCTION	FIELD INSPECTION	LEVEL B - PERIODIC
10. VERIFY PREPARATION, CONSTRUCTION, AND PROTECTION OF MASONRY DURING COLD WEATHER (TEMPERATURE BELOW 40° F) OR HOT WEATHER (TEMPERATURE ABOVE 90° F)	FIELD INSPECTION	PERIODIC
11. VERIFY PROPERTIES OF THIN-BED MORTAR FOR AAC MASONRY (FIRST 5000 SF OF AAC MASONRY)	FIELD INSPECTION	CONTINUOUS
12. VERIFY PROPERTIES OF THIN-BED MORTAR FOR AAC MASONRY (AFTER THE FIRST 5000 SF OF AAC MASONRY)	FIELD INSPECTION	LEVEL B - PERIODIC
13. PREPARE GROUT AND MORTAR SPECIMENS	FIELD INSPECTION	LEVEL B - PERIODIC
14. OBSERVE PREPARATION OF PRISMS	FIELD INSPECTION	LEVEL B - PERIODIC

1705.6 REQUIRED VERIFICATION AND INSPECTION OF SOILS

MATERIAL / ACTIVITY	SERVICE	EXTENT
1. VERIFY MATERIALS BELOW SHALLOW FOUNDATIONS ARE ADEQUATE TO ACHIEVE THE DESIGN BEARING CAPACITY	FIELD INSPECTION	PERIODIC
2. VERIFY EXCAVATIONS ARE EXTENDED TO PROPER DEPTH AND HAVE REACHED PROPER MATERIAL	FIELD INSPECTION	PERIODIC
3. PERFORM CLASSIFICATION AND TESTING OF CONTROLLED FILL MATERIALS	FIELD INSPECTION	PERIODIC
4. VERIFY USE OF PROPER MATERIALS, DENSITIES, AND LIFT THICKNESS DURING PLACEMENT AND COMPACTION OF COMPACTED FILL	FIELD INSPECTION	CONTINUOUS
5. PRIOR TO PLACEMENT OF CONTROLLED FILL, OBSERVE SUBGRADE AND VERIFY THAT SITE HAS BEEN PREPARED PROPERLY	FIELD INSPECTION	PERIODIC

SANDY SPRINGS GEORGIA

GEORGIA REGISTERED No. PE044592 PROFESSIONAL ENGINEER BENJAMIN ORELLIN

SEAL

MARK	DESCRIPTION	DATE
1	Bid Set	10.14.2019
0	Land Disturbance Permit	09.24.2019

ISSUE DATE: SEP 24 2019
SOLICITATION NO.:
CONTRACT NO.:
FILE NUNBER:
PLOT DATE:

DESIGNED BY: KP
DWN BY: KP
CKD BY: KP
SUBMITTED BY: BJ
FILE NAME:
SIZE: 22"x34"
PLOT SCALE:

CITY OF SANDY SPRINGS:
SANDY SPRINGS CITY HALL
1 GALAMBOS WAY
SANDY SPRINGS, GA 30328

POND
3600 Parkway Lane
Peachtree Corners, GA
30092 (Gwinnett)
Phone (678) 336-7140
Fax (678) 336-7144
JOB NO. 1190108

HERITAGE PARK IMPROVEMENTS

SPECIAL INSPECTIONS

SHEET IDENTIFICATION NUMBER
S-003

10/14/2019 3:32:01 PM C:\Users\parkk\Documents\1190708_SS_Heritage_Park_Struct_v19_parkk@pondco.com.rvt

Copyright © 2019 by Pond & Company. All rights reserved. No copying or duplication of these documents is allowed without the express written agreement of Pond & Company.

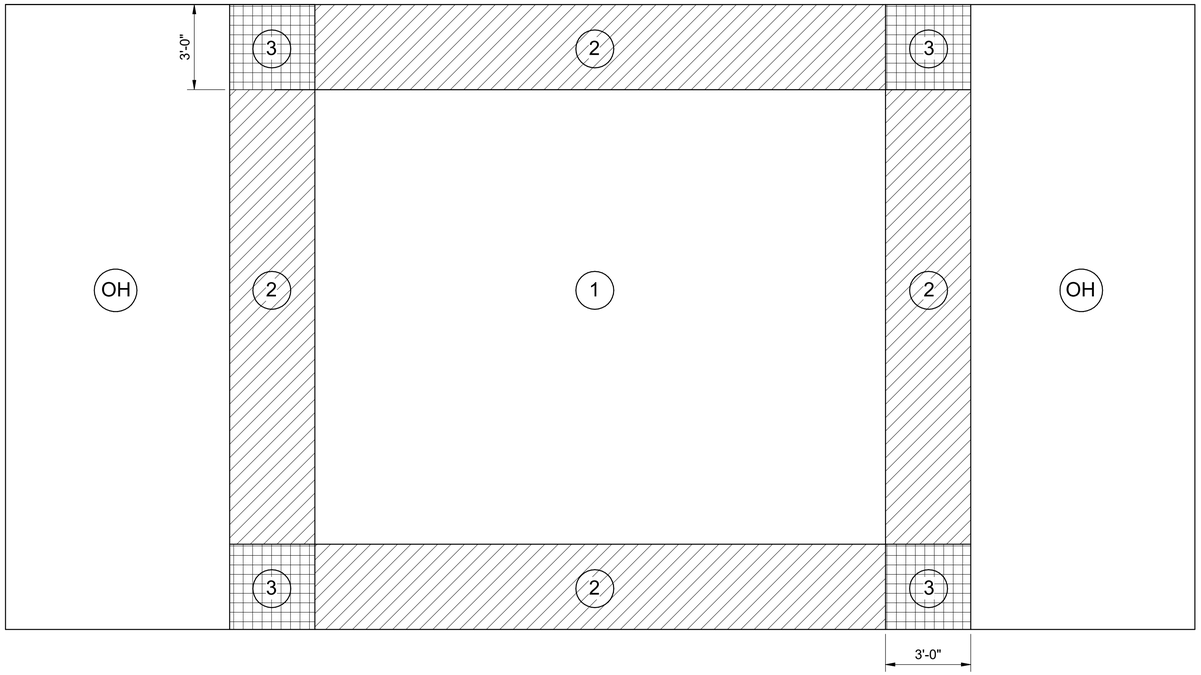

WIND LOADING NOTES:

1. POSITIVE VALUES ACT TOWARD THE ROOF SURFACE (COMPRESSION) AND NEGATIVE VALUES ACT AWAY FROM THE ROOF SURFACE (UPLIFT).
2. FOR ROOF JOIST DESIGN, NET UPLIFT = SCHEDULED VALUE + 6 psf.
3. LINEAR INTERPOLATION PERMITTED BETWEEN VALUES.
4. VALUES INDICATED IN TABLES ARE FACTORED LOADS IN ACCORDANCE WITH ASCE 7-10.

WALL COMPONENTS AND CLADDING WIND PRESSURE SCHEDULE

ZONE	EFFECTIVE WIND AREA			
	AREA ≤ 10 S.F.	AREA = 50 S.F.	AREA = 200 S.F.	500 S.F. ≤ AREA
1	+16.0/-23.8 PSF	+16.0/-23.0 PSF	+16.0/-22.4 PSF	+16.0/-21.8 PSF
2	+16.0/-39.9 PSF	+16.0/-34.3 PSF	+16.0/-30.0 PSF	+16.0/-25.8 PSF
3	+16.0/-39.9 PSF	+16.0/-34.3 PSF	+16.0/-30.0 PSF	+16.0/-25.8 PSF

NOTE: OH = ABS(4 OR 5) + ABS(2 OR 3)

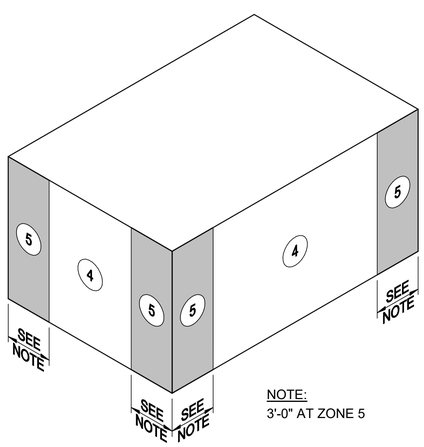

NOTE:
3'-0" AT ZONE 5

WALL COMPONENTS AND CLADDING WIND PRESSURE SCHEDULE

ZONE	EFFECTIVE WIND AREA			
	AREA ≤ 10 S.F.	AREA = 50 S.F.	AREA = 200 S.F.	500 S.F. ≤ AREA
4	+21.8/-23.6 PSF	+19.5/-21.3 PSF	+17.6/-19.4 PSF	+16.3/-18.1 PSF
5	+21.8/-29.0 PSF	+19.5/-24.5 PSF	+17.6/-20.7 PSF	+16.3/-18.1 PSF

SANDY SPRINGS GEORGIA

GEORGIA REGISTERED No. PE044592 PROFESSIONAL ENGINEER BENJAMIN ORELLIN 10/14/19
SEAL

MARK	DESCRIPTION	DATE
1	Bid Set	10.14.2019
0	Land Disturbance Permit	09.24.2019

DESIGNED BY: KP
DWN BY: KP
CKD BY: KP
SUBMITTED BY: BJ
FILE NAME:
SIZE: 22"X34"
PLOT SCALE:
ISSUE DATE: SEP 24 2019
SOLICITATION NO.:
CONTRACT NO.:
FILE NUNBER:
PLOT DATE:

CITY OF SANDY SPRINGS:
SANDY SPRINGS CITY HALL
1 GALAMBOS WAY
SANDY SPRINGS, GA 30328

POND
3500 Parkway Lane
Peachtree Corners, GA
Suite 30092
Phone (678) 336-7140
Fax (678) 336-7144
JOB NO. 1190708

HERITAGE PARK IMPROVEMENTS

WIND LOAD DIAGRAM

SHEET IDENTIFICATION NUMBER
S-004

10/14/2019 3:32:02 PM C:\Users\parkk\Documents\1190708_SS_Heritage_Park_Struct_v19_parkk@pondco.com.rvt

Copyright © 2019 by Pond & Company. All rights reserved. No copying or duplication of these documents is allowed without the express written agreement of Pond & Company.

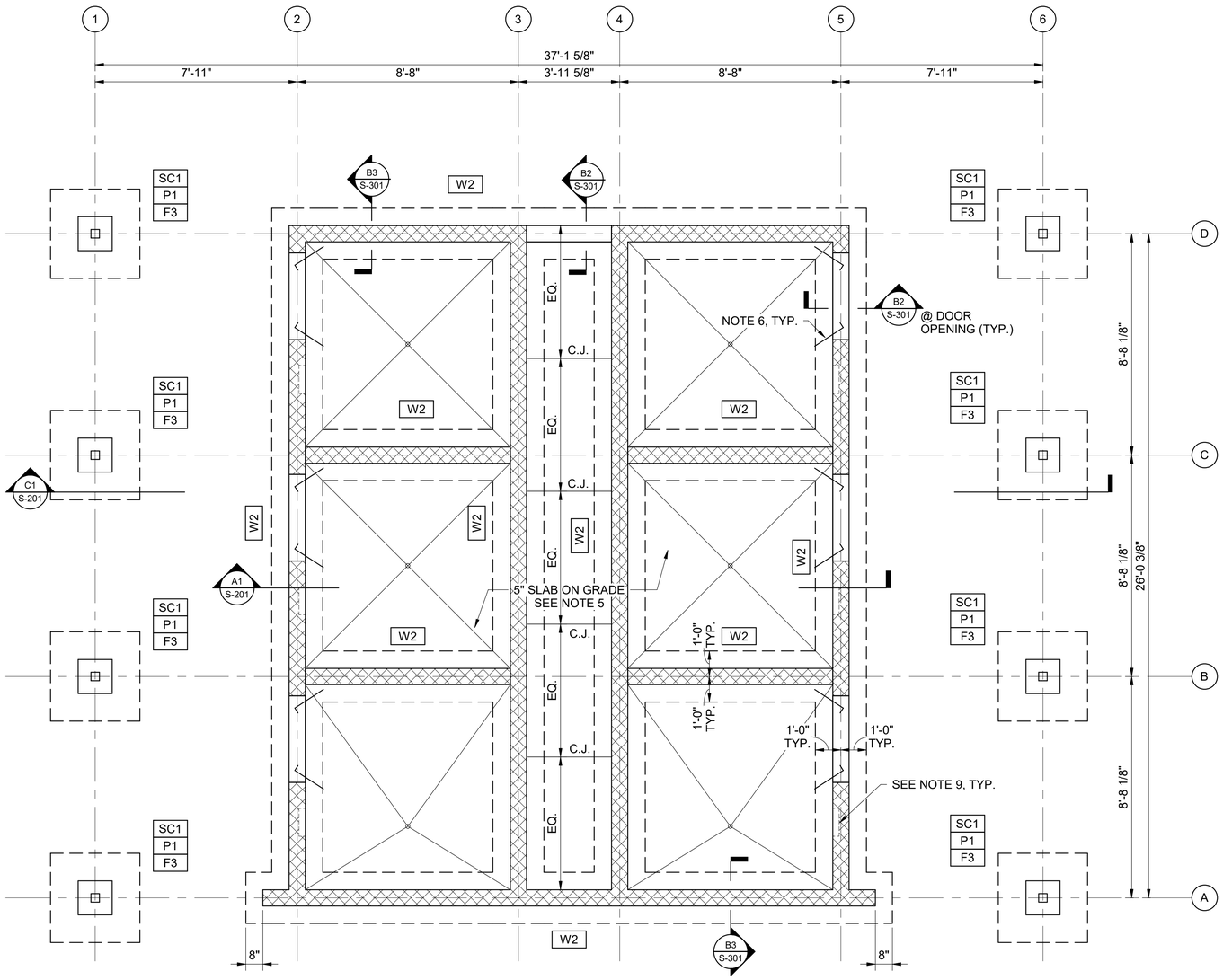

A1 FOUNDATION PLAN

SCALE: N.T.S.

FOUNDATION PLAN NOTES:

1. SEE SHEETS S-001 AND S-002 FOR GENERAL STRUCTURAL NOTES AND ABBREVIATION KEY.
2. REFERENCE FLOOR ELEVATION OF 0'-0" CORRESPONDS TO USGS ELEVATION OF 1061.75'. SEE CIVIL DRAWINGS.
3. TOP OF FIRST FLOOR SLAB ELEVATION = 0'-0" UNLESS NOTED OTHERWISE.
4. TOP OF FOOTING ELEVATIONS = -1'-4', UNLESS NOTED OTHERWISE.
5. SLAB ON GRADE SHALL BE 5" THICK CONCRETE, REINFORCED WITH 6x6-W2.9xW2.9 WWR PLACED AT 2" BELOW TOP SLAB SURFACE. SLAB SHALL BE PLACED OVER 10 mil VAPOR RETARDER AND GRAVEL FILL OVER COMPACTED FILL PER GEOTECHNICAL ENGINEER.
6. FOR ADDITIONAL REINFORCEMENT AT RE-ENTRANT CORNERS, SEE DETAIL D3/S-501.
7. CMU WALLS SHALL BE 8" THICK AND HAVE #4@16" O.C. VERTICAL REINFORCEMENT AND BOND BEAMS WITH (2) #4 HORIZONTAL BARS AT TOP OF WALL. FILL ALL REINFORCED CELLS AND ALL CELLS BELOW GRADE WITH GROUT.
8. SEE PLUMBING AND ARCHITECTURAL DRAWINGS FOR FLOOR DRAIN AND SLAB-ON-GRADE DEPRESSION LOCATIONS AND REQUIREMENTS.
9. EMBEDDED UNIT HEADER, PROVIDE REINFORCING DETAILS PER A4/S-502 AND COORDINATE THE EXACT EMBEDDED UNIT HEADER LOCATION WITH MEP DRAWINGS.

FOUNDATION PLAN LEGEND:

F#	FOOTING TYPE, SEE FOUNDATION SCHEDULE
SC#	STEEL COLUMN TYPE, SEE STEEL COLUMN SCHEDULE
P#	PEDESTAL TYPE, SEE CONCRETE PEDESTAL SCHEDULE
C.J.	SLAB CONTROL/CONSTRUCTION JOINT, SEE DETAIL C4&B4/S-501
	SLOPED SLAB AREA FOR FLOOR DRAIN. SEE ARCH. AND PLUMBING FOR MORE DETAILS
	CMU WALL

FOUNDATION SCHEDULE

TYPE MARK	WIDTH	LENGTH	THICKNESS	REINFORCEMENT
F3	3'-6"	3'-6"	1'-2"	(5)-#4 AT TOP AND BOT.
W2	2'-0"	SEE PLAN	1'-0"	(3)-#4 AT BOT IN LONGITUDINAL DIR. #4 @ 8" O.C. AT BOT IN TRANSVERSE DIR.

CONCRETE PEDESTAL SCHEDULE

TYPE MARK	DIMENSION	TOP ELEVATION	REINFORCEMENT
P1	1'-6"x1'-6"	SEE D2/S-301	(8)-#6 IN VERTICAL

STEEL COLUMN SCHEDULE

TYPE MARK	COLUMN SIZE
SC1	HSS4x4x1/4

SANDY SPRINGS
GEORGIA

GEORGIA REGISTERED No. PE044592 PROFESSIONAL ENGINEER BENJAMIN ORELLIN
SEAL

MARK	DESCRIPTION	DATE
1	Bid Set	10.14.2019
0	Land Disturbance Permit	09.24.2019

ISSUE DATE: SEP 24 2019
SOLICITATION NO.:
CONTRACT NO.:
FILE NUMBER:
PLOT DATE:
DESIGNED BY: KP
DWN BY: KP
CKD BY: KP
SUBMITTED BY: BJ
FILE NAME:
SIZE: 22"x34"
PLOT SCALE:

CITY OF SANDY SPRINGS:
SANDY SPRINGS CITY HALL
1 GALAMBOS WAY
SANDY SPRINGS, GA 30328

POND
3500 Parkway Lane
Peachtree Corners, GA
30092 Suite 325
Phone (678) 336-7740
Fax (678) 336-7744
JOB NO. 1190708

HERITAGE PARK IMPROVEMENTS

FOUNDATION PLAN

SHEET IDENTIFICATION NUMBER
S-101

10/14/2019 3:32:02 PM C:\Users\parkk\Documents\1190708_SS_Heritage_Park_Struct_v19_parkk@pondco.com.rvt

Copyright © 2019 by Pond & Company. All rights reserved. No copying or duplication of these documents is allowed without the express written agreement of Pond & Company.

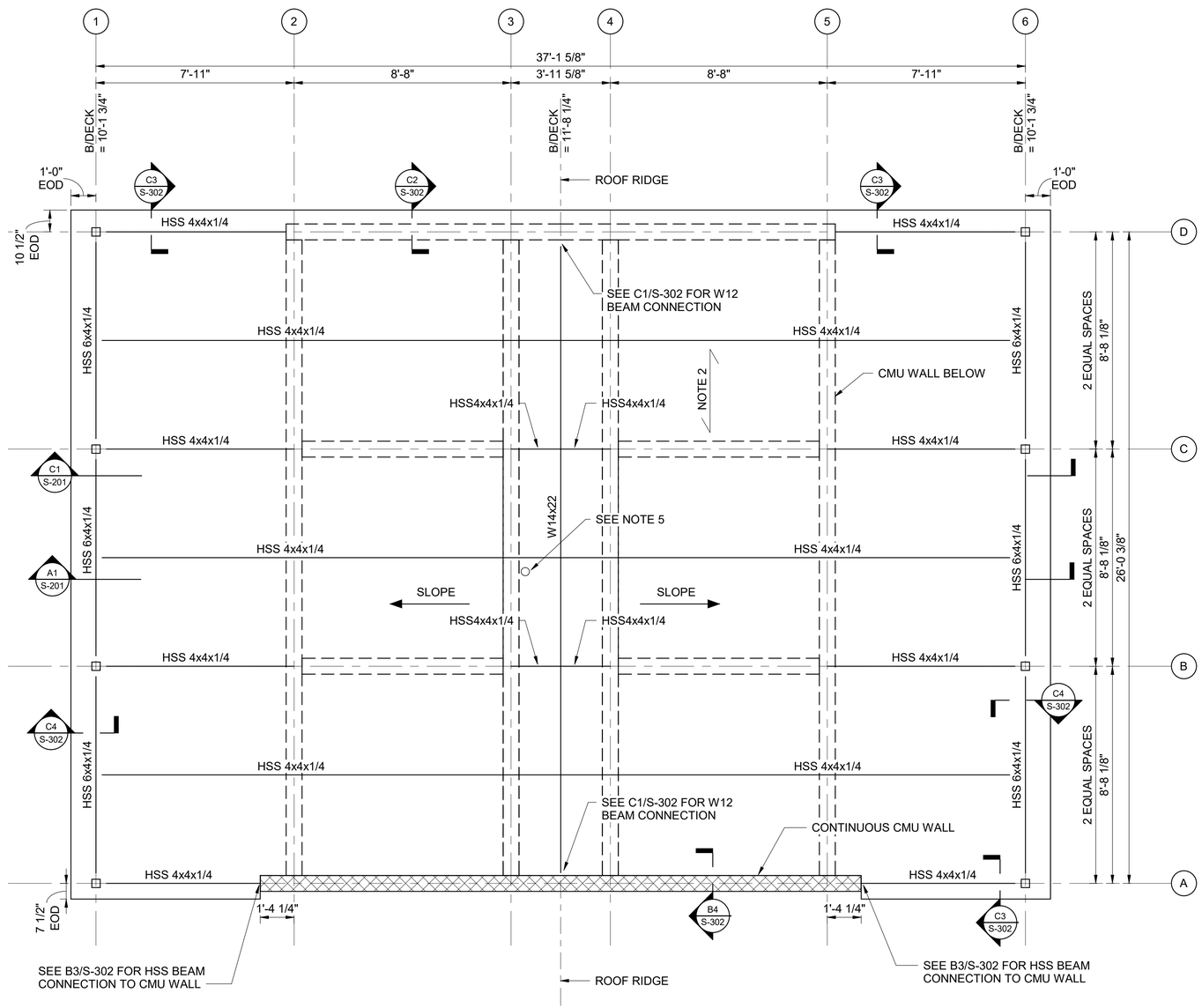

A1 FRAMING SECTIONS

SCALE: N.T.S.

ROOF FRAMING PLAN NOTES:

1. SEE SHEETS S-001 AND S-002 FOR GENERAL STRUCTURAL NOTES AND ABBREVIATION KEY.
2. ROOF DECK = 1 1/2 DEEP, WIDE RIB, 20 GAUGE (GALVANIZED).
3. ROOF DECK AND ATTACHMENT SHALL BE OF THE TYPE SPECIFIED IN GENERAL NOTE G.3 ON SHEET S-002.
4. ROOF BEAMS AND ROOF JOISTS SHALL BE EQUALLY SPACED BETWEEN COLUMN LINES, UNLESS NOTED OTHERWISE.
5. SEE C3/S-503 FOR ROOF PENETRATION. COORDINATE THE EXACT PENETRATION LOCATIONS AND SIZE WITH MEP DRAWAING.
6. SEE D2/S-503 FOR TYPICAL HSS CONNECTION DETAILS.
7. ALL STEEL SHALL BE HOT DIP GALVANIZED.

ROOF FRAMING PLAN LEGEND:

	DIRECTION OF DECK SPAN
SLOPE	ROOF SLOPE DOWN DIRECTION
EOD	EDGE OF DECK

SANDY SPRINGS GEORGIA

GEORGIA REGISTERED No. PE044592 PROFESSIONAL ENGINEER BENJAMIN ORELLIN 10/14/19 SEAL

MARK	DESCRIPTION	DATE
1	Bid Set	10.14.2019
0	Land Disturbance Permit	09.24.2019

DESIGNED BY: KP
DWN BY: KP
CKD BY: KP
SUBMITTED BY: BJ
FILE NAME:
SIZE: 22"X34"
PLOT SCALE:
ISSUE DATE: SEP 24 2019
SOLICITATION NO.:
CONTRACT NO.:
FILE NUNBER:
PLOT DATE:

CITY OF SANDY SPRINGS:
SANDY SPRINGS CITY HALL
1 GALAMBOS WAY
SANDY SPRINGS, GA 30328

POND
3500 Parkway Lane
Peachtree Corners, GA
30092, Suite 500
Phone (678) 336-7740
Fax (678) 336-7744
JOB NO. 1190708

HERITAGE PARK IMPROVEMENTS

ROOF PLAN

SHEET IDENTIFICATION NUMBER
S-102

10/14/2019 3:32:02 PM C:\Users\parkk\Documents\1190708_SS_Heritage_Park_Struct_v19_parkk@pondco.com.rvt

Copyright © 2019 by Pond & Company. All rights reserved. No copying or duplication of these documents is allowed without the express written agreement of Pond & Company.

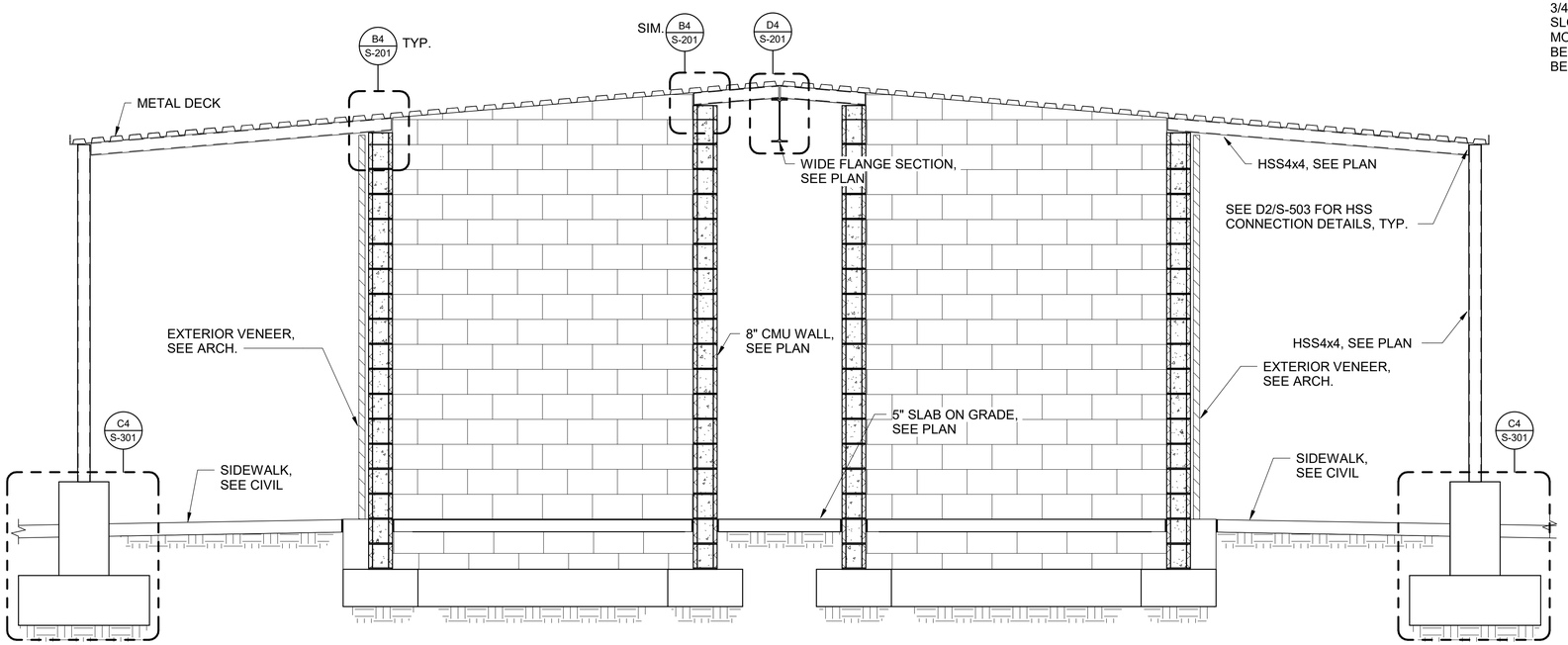

C1 FRAMING ELEVATION AT WALL

SCALE: N.T.S.

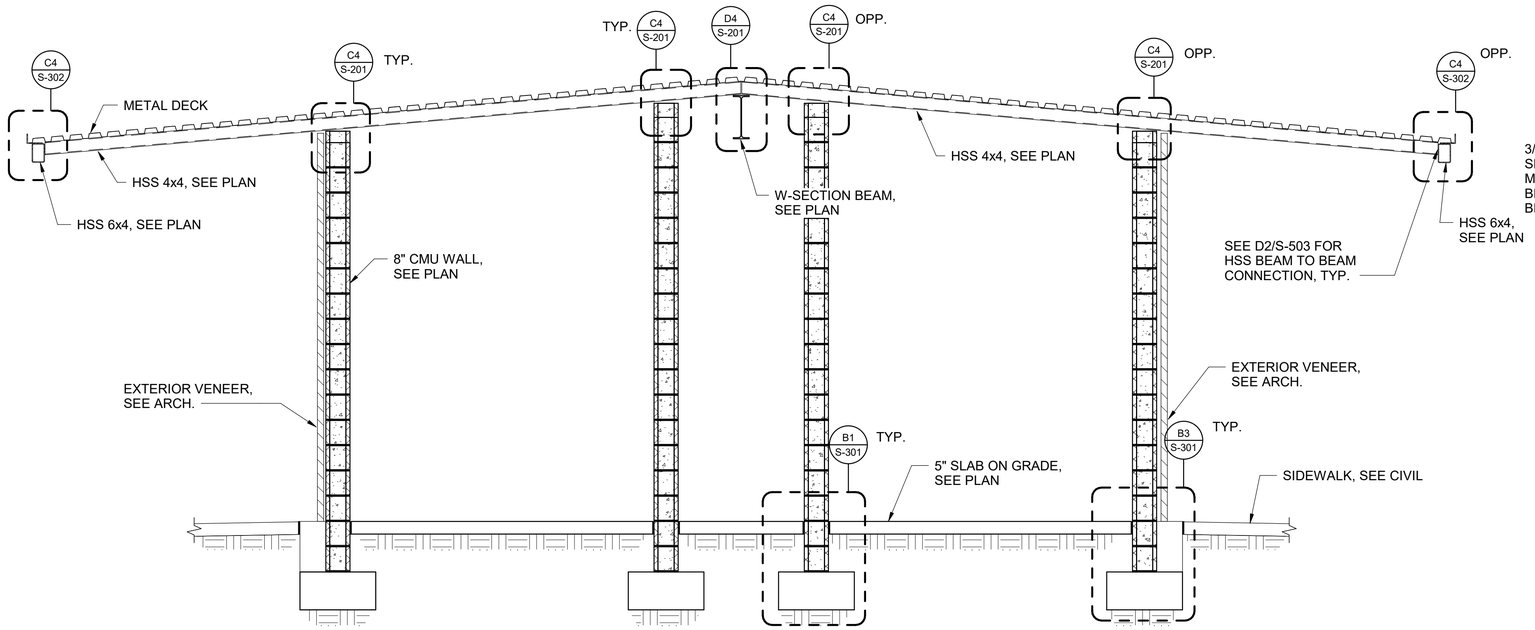

A1 FRAMING ELEVATION BETWEEN WALL

SCALE: N.T.S.

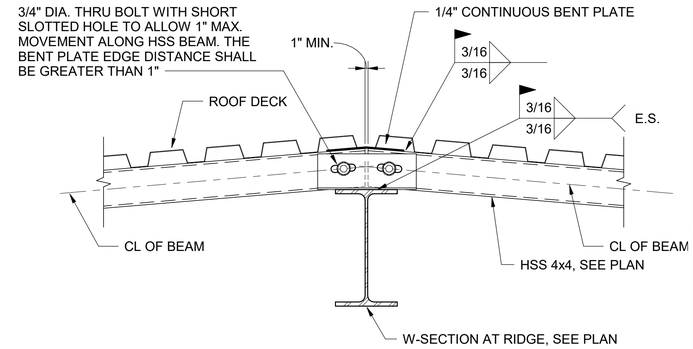

D4 SECTION AT RIDGE BEAM

SCALE: N.T.S.

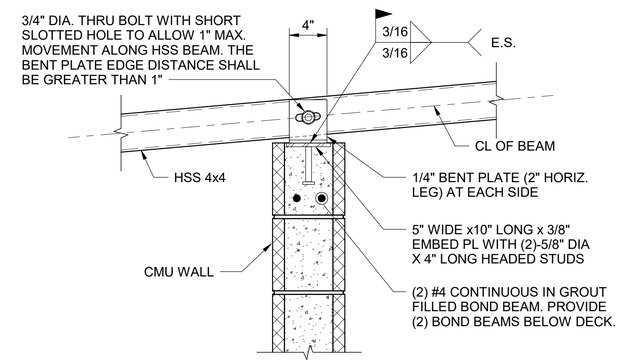

C4 HSS CONNECTION AT TOP OF WALL

SCALE: N.T.S.

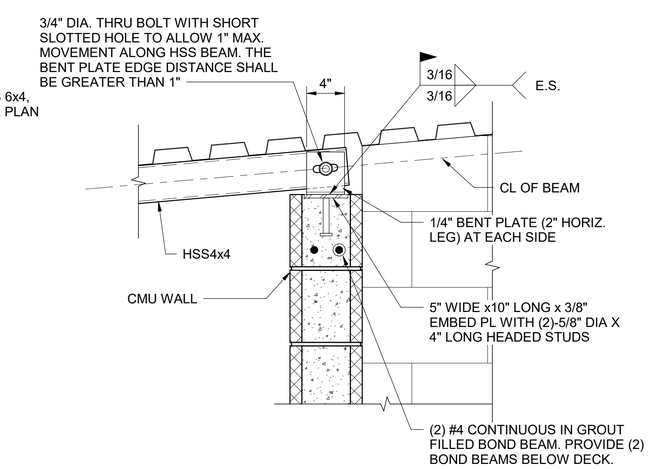

B4 HSS CONNECTION AT TOP OF WALL

SCALE: N.T.S.

SANDY SPRINGS GEORGIA

GEORGIA REGISTERED PROFESSIONAL ENGINEER No. PE044592 10/14/19 BENJAMIN ORELLIN

SEAL

MARK	DESCRIPTION	DATE
1	Bid Set	10.14.2019
0	Land Disturbance Permit	09.24.2019

ISSUE DATE: SEP 24 2019
SOLICITATION NO.:
CONTRACT NO.:
FILE NUMBER:
PLOT DATE:

DESIGNED BY: KP
DWN BY: KP
CKD BY: KP
SUBMITTED BY: BJ
FILE NAME:
PLOT SCALE:
SIZE: 22"x34"

CITY OF SANDY SPRINGS:
SANDY SPRINGS CITY HALL
1 GALAMBOS WAY
SANDY SPRINGS, GA 30328

POND
3600 Parkway Lane
Peachtree Corners, GA 30092-2892
Phone (678) 338-7140
Fax (678) 338-7144
JOB NO. 1190708

HERITAGE PARK IMPROVEMENTS

STRUCTURAL ELEVATIONS

SHEET IDENTIFICATION NUMBER
S-201

10/14/2019 9:32:03 PM C:\Users\parkk\Documents\1190708_SS_Heritage_Park_Struct_v19_parkk@pondco.com.rvt

Copyright © 2019 by Pond & Company. All rights reserved. No copying or duplication of these documents is allowed without the express written agreement of Pond & Company.

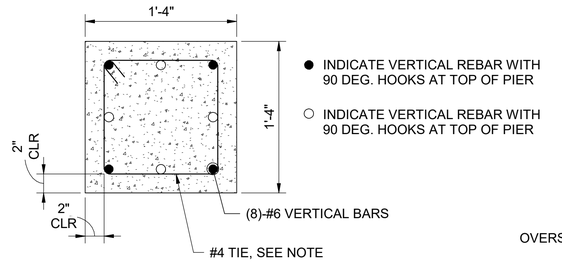

NOTE: PLACE 1 #4 TIE 2" BELOW TOP OF PEDESTAL, WITH ANOTHER #4 TIE SPACED AT 4" O.C. BELOW THE TOP #4 TIE. SPACE REMAINDER OF TIES AT 12" O.C.

D2 PEDESTAL SECTION

SCALE: N.T.S.

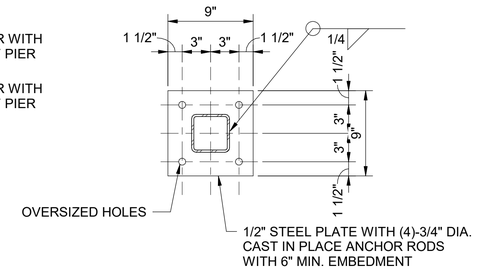

D3 BASE PLATE DETAIL

SCALE: N.T.S.

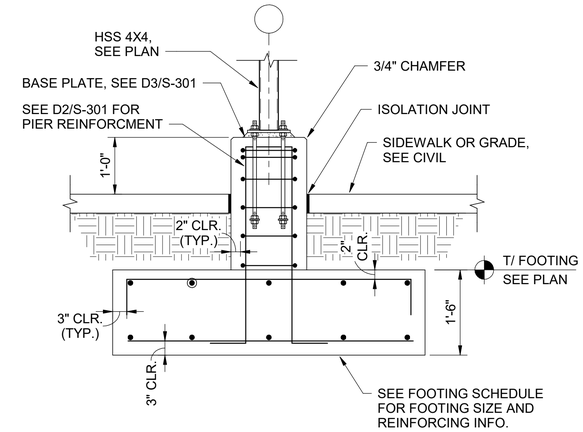

C4 TYPICAL PIER AND FOOTING SECTION

SCALE: N.T.S.

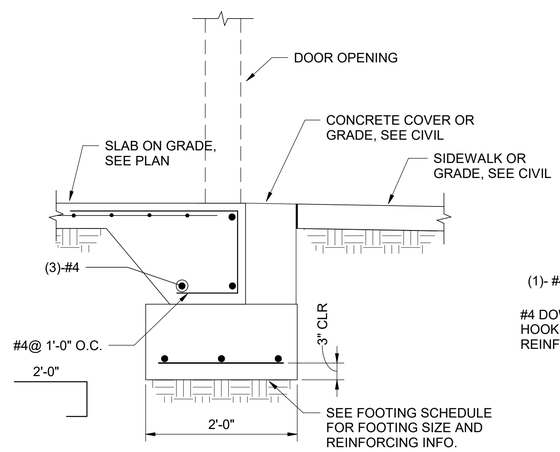

TYPICAL EXTERIOR CMU WALL

B2 SECTION AT DOOR OPENINGS

SCALE: N.T.S.

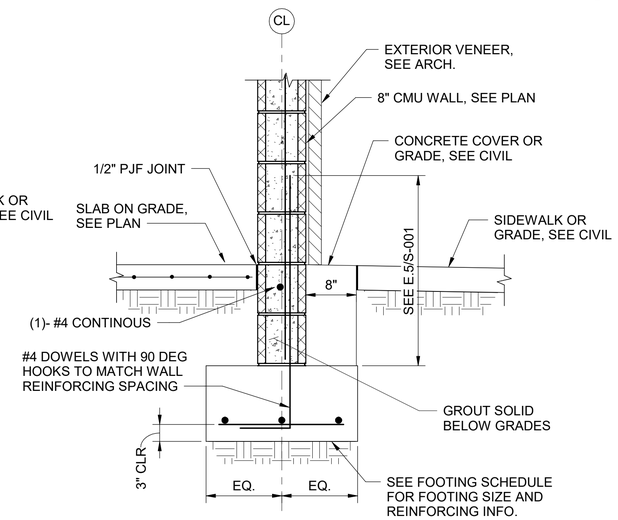

TYPICAL EXTERIOR CMU WALL

B3 EXTERIOR CMU FOOTING

SCALE: N.T.S.

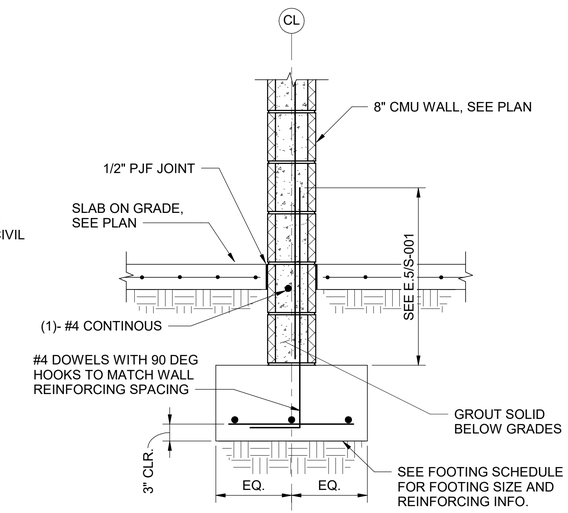

TYPICAL INTERIOR CMU WALL

B1 INTERIOR CMU FOOTING

SCALE: N.T.S.

SANDY SPRINGS GEORGIA

GEORGIA REGISTERED No. PE044592 PROFESSIONAL ENGINEER BENJAMIN ORELLIN

SEAL

MARK	DESCRIPTION	DATE
1	Bid Set	10.14.2019
0	Land Disturbance Permit	09.24.2019

ISSUE DATE: SEP 24 2019
SOLICITATION NO.:
CONTRACT NO.:
FILE NUMBER:
PLOT DATE:

DESIGNED BY: KP
DWN BY: KP
CKD BY: KP
SUBMITTED BY: BJ
FILE NAME:
PLOT SCALE:
SIZE: 22"X34"

CITY OF SANDY SPRINGS:
SANDY SPRINGS CITY HALL
1 GALAMBOS WAY
SANDY SPRINGS, GA 30328

POND
3600 Parkway Lane
Peachtree Corners, GA 30092 Suite 100
Phone (678) 336-7140
Fax (678) 336-7144

JOB NO. 1190708

HERITAGE PARK IMPROVEMENTS

FRAMING SECTIONS

SHEET IDENTIFICATION NUMBER

S-301

10/14/2019 9:32:03 PM C:\Users\parkk\Documents\1190708_SS_Heritage_Park_Struct_v19_parkk@pondco.com.rvt

Copyright © 2019 by Pond & Company. All rights reserved. No copying or duplication of these documents is allowed without the express written agreement of Pond & Company.

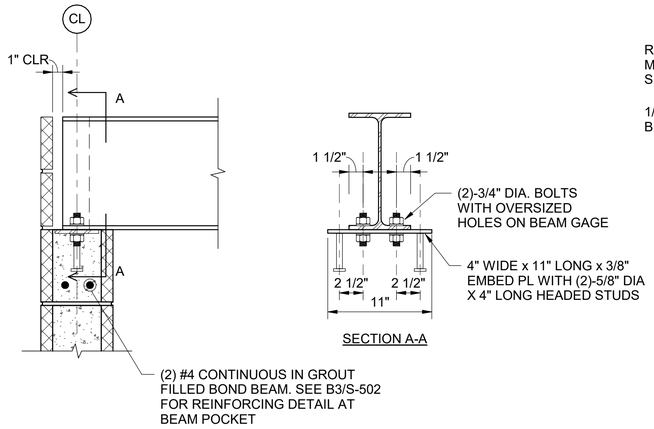

C1 BEAM CONNECTION TO CMU WALL

SCALE: N.T.S.

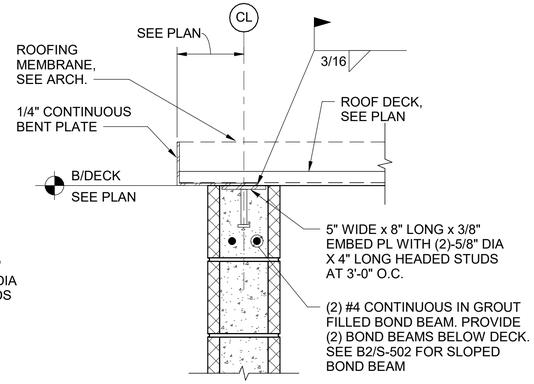

C2 SECTION AT END OF DECK

SCALE: N.T.S.

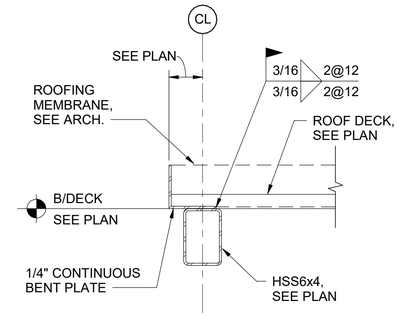

C3 SECTION AT END OF DECK

SCALE: N.T.S.

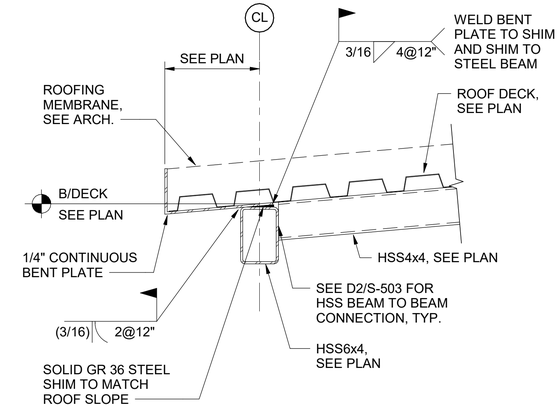

C4 SECTION AT END OF DECK

SCALE: N.T.S.

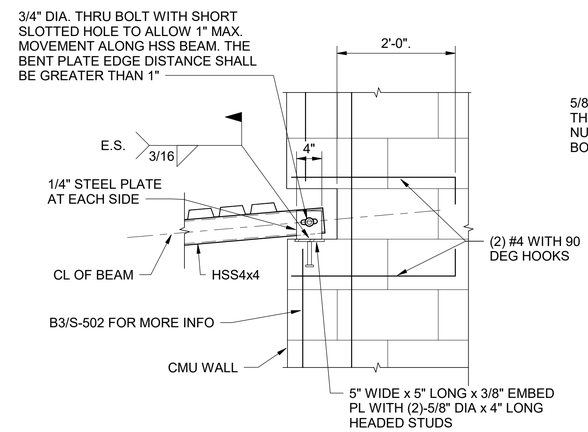

B3 HSS BEAM CONNECTION TO WALL

SCALE: N.T.S.

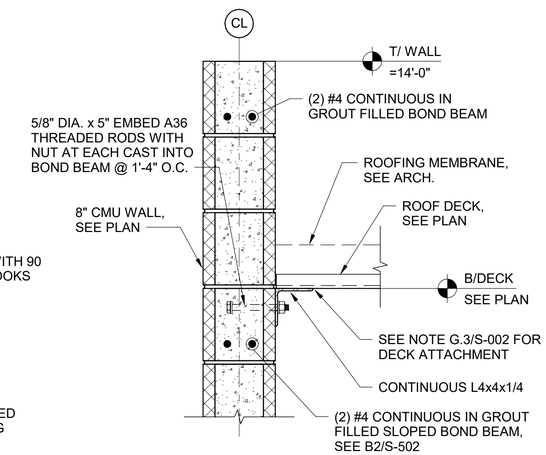

B4 SECTION AT CONTINUOUS WALL

SCALE: N.T.S.

SANDY SPRINGS
GEORGIA

GEORGIA REGISTERED No. PE044592 PROFESSIONAL ENGINEER BENJAMIN ORELLIN
SEAL

MARK	DESCRIPTION	DATE
1	Bid Set	10.14.2019
0	Land Disturbance Permit	09.24.2019

ISSUE DATE: SEP 24 2019
SOLICITATION NO.:
CONTRACT NO.:
FILE NUMBER:
PLOT DATE:
DESIGNED BY: KP
DWN BY: KP
CKD BY: KP
SUBMITTED BY: BJ
FILE NAME:
PLOT SCALE:
SIZE: 22"x34"

CITY OF SANDY SPRINGS:
SANDY SPRINGS CITY HALL
1 GALAMBOS WAY
SANDY SPRINGS, GA 30328

POND
3500 Parkway Lane
Peachtree Corners, GA
30092, Suite 400
Phone (678) 336-7740
Fax (678) 336-7744
JOB NO. 1190708

HERITAGE PARK IMPROVEMENTS

FRAMING ELEVATIONS

SHEET IDENTIFICATION NUMBER
S-302

10/14/2019 3:32:04 PM C:\Users\parkk\Documents\1190708_SS_Heritage_Park_Struct_v19_parkk@pondco.com.rvt

Copyright © 2019 by Pond & Company. All rights reserved. No copying or duplication of these documents is allowed without the express written agreement of Pond & Company.

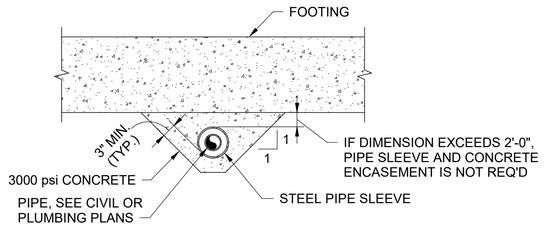

D2 PIPE UNDER FOOTING

SCALE: N.T.S.

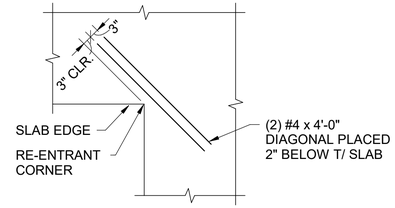

NOTE: DO NOT PROVIDE BARS WHERE CONTROL JOINTS COINCIDE AT RE-ENTRANT CORNER.

D3 REBARS AT RE-ENTRANT CORNER

SCALE: N.T.S.

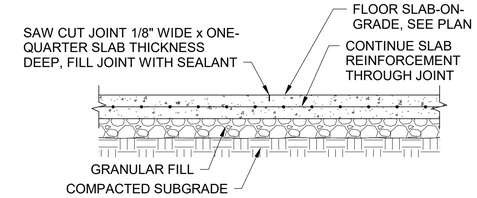

NOTES:

1. SLAB SHALL BE SAWN AS SOON AS THE CONCRETE WILL SAFELY SUPPORT MEN AND EQUIPMENT.
2. FILL JOINT WITH SEALANT AFTER SLAB HAS CURED.
3. CONSTRUCTION JOINT MAY REPLACE CONTROL JOINT, SEE B4/S-501.

C4 TYPICAL SLAB-ON-GRADE CONTROL JOINT

SCALE: N.T.S.

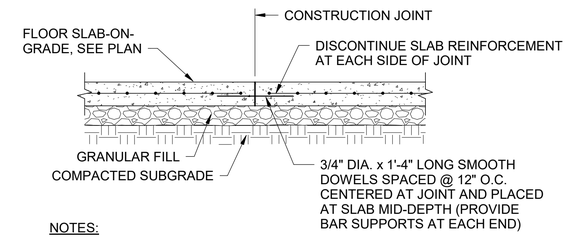

NOTES:

1. FILL JOINT WITH SEALANT AFTER SLAB HAS BEEN CURED.
2. DOWELS SHALL BE SMOOTH AND LIGHTLY GREASED ON ONE END TO PREVENT BONDING TO CONCRETE. DOWELS SHALL BE SUPPORTED SO THEY WILL REMAIN PARALLEL IN BOTH THE HORIZONTAL AND VERTICAL PLANES.
3. CONTROL JOINT MAY REPLACE CONSTRUCTION JOINT, SEE C4/S-501.

B4 TYPICAL SLAB-ON-GRADE CONSTRUCTION JOINT

SCALE: N.T.S.

SANDY SPRINGS GEORGIA

GEORGIA REGISTERED No. PE044592 PROFESSIONAL ENGINEER BENJAMIN CRELLIN 10/14/19

SEAL

MARK	DESCRIPTION	DATE
1	Bid Set	10.14.2019
0	Land Disturbance Permit	09.24.2019

DESIGNED BY: KP
DWN BY: KP
CKD BY: KP
SUBMITTED BY: BJ
FILE NAME:
SIZE: 22"x34"
PLOT SCALE:
ISSUE DATE: SEP 24 2019
SOLICITATION NO.:
CONTRACT NO.:
FILE NUNBER:
PLOT DATE:

CITY OF SANDY SPRINGS:
SANDY SPRINGS CITY HALL
1 GALAMBOS WAY
SANDY SPRINGS, GA 30328

POND
3500 Parkway Lane
Peachtree Corners, GA 30092, Suite 500
Phone (678) 336-7740
Fax (678) 336-7744
JOB NO. 1190708

HERITAGE PARK IMPROVEMENTS

STRUCTURAL DETAILS

SHEET IDENTIFICATION NUMBER
S-501

10/14/2019 3:32:04 PM C:\Users\parkk\Documents\1190708_SS_Heritage_Park_Struct_v19_parkk@pondco.com.rvt

Copyright © 2019 by Pond & Company. All rights reserved. No copying or duplication of these documents is allowed without the express written agreement of Pond & Company.

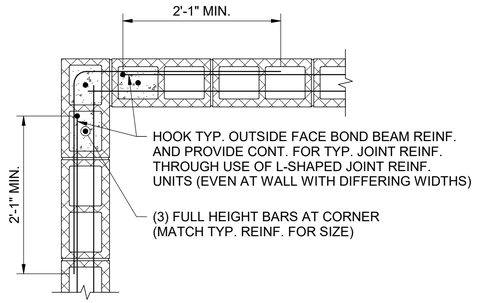

MASONRY AT CORNER

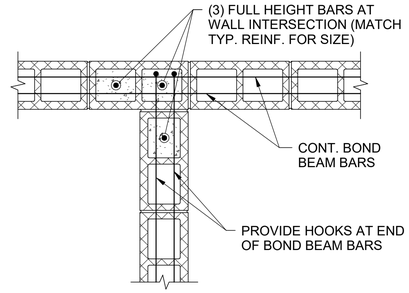

MASONRY AT INTERSECTION

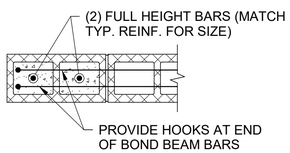

MASONRY AT END

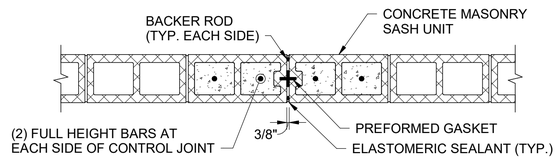

MASONRY AT CONTROL JOINT

C1 TYPICAL CMU DETAILS

SCALE: N.T.S.

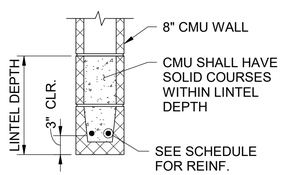

CONCRETE MASONRY LINTEL SCHEDULE

WALL OPENING	LINTEL DEPTH	REINFORCING
WIDTH < 4'-0"	8"	(2) #4 BARS
4'-0" ≤ WIDTH < 6'-0"	16"	(2) #4 BARS
6'-0" ≤ WIDTH < 12'-0"	24"	(2) #5 BARS

B1 TYPICAL CMU LINTEL

SCALE: N.T.S.

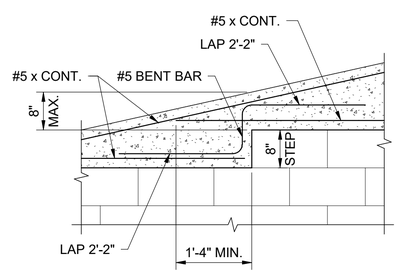

B2 TYPICAL CMU SLOPED BOND BEAM

SCALE: N.T.S.

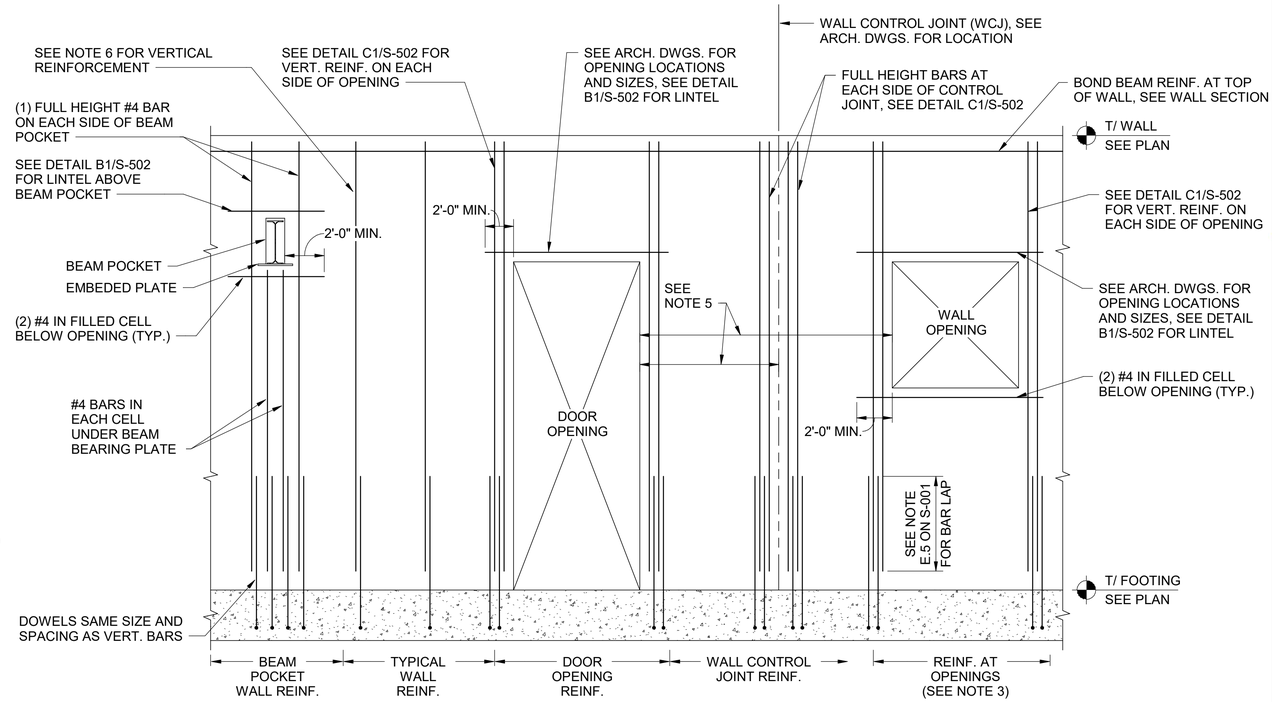

NOTES FOR SCHEMATIC WALL DETAIL:

1. SEE GENERAL NOTE E.8 ON SHEET S-001 FOR TYPICAL JOINT REINFORCEMENT.
2. STOP ALL VERTICAL BARS 3" FROM TOP OF WALL.
3. SEE ARCHITECTURAL DRAWINGS FOR OPENING LOCATIONS AND SIZES.
4. WHERE THE DISTANCE BETWEEN OPENINGS OR DISTANCE BETWEEN JOINT AND OPENING IS LESS THAN 4'-0": PROVIDE (2) FULL LENGTH VERTICAL BARS IN EVERY CELL AND PROVIDE #3 + STD. HK. HORIZONTAL BARS @ 4'-0" O.C. VERTICALLY (UNLESS NOTED OTHERWISE FOR LENGTH THAT IS LESS THAN 4'-0" LONG).
5. WHERE (2) BARS ARE REQUIRED IN A CELL. ONE BAR CENTER SHALL OCCUR 2 1/4" FROM THE EXTERIOR FACE OF THE CMU WALL & ONE BAR CENTER SHALL OCCUR 2 1/4" FROM THE INTERIOR FACE OF THE CMU WALL. ONLY 1 DOWEL BAR SHALL BE REQUIRED.
6. CMU WALLS SHALL BE 8" THICK AND HAVE #4@16" O.C. VERTICAL REINFORCEMENT AND BOND BEAMS WITH (2) #4 HORIZONTAL BARS AT TOP OF WALL. FILL ALL REINFORCED CELLS AND ALL CELLS BELOW GRADE WITH GROUT

B3 TYPICAL CMU WALL SCHEMATIC

SCALE: N.T.S.

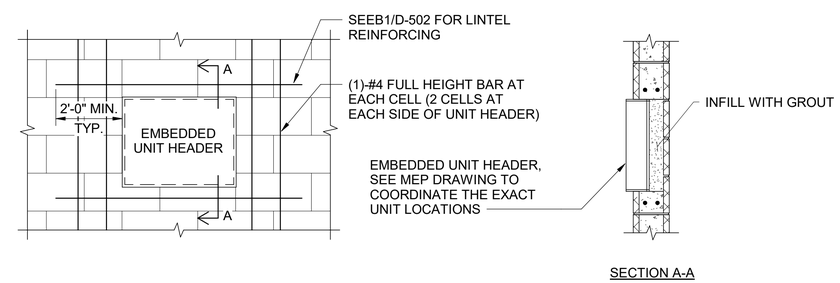

A4 EMBEDDED UNIT HEADER AT WALL

SCALE: N.T.S.

SANDY SPRINGS GEORGIA

GEORGIA REGISTERED No. PE044592 PROFESSIONAL ENGINEER BENJAMIN ORELLIN SEAL

MARK	DESCRIPTION	DATE
1	Bid Set	10.14.2019
0	Land Disturbance Permit	09.24.2019

ISSUE DATE: SEP.24.2019
SOLICITATION NO.:
CONTRACT NO.:
FILE NUMBER:
PLOT DATE:

DESIGNED BY: KP
DWN BY: KP
CKD BY: KP
SUBMITTED BY: BJ
FILE NAME:
SIZE: 22"X34"
PLOT SCALE:

CITY OF SANDY SPRINGS:
SANDY SPRINGS CITY HALL
1 GALAMBOS WAY
SANDY SPRINGS, GA 30328

POND
3600 Parkway Lane, Peachtree Corners, GA 30092 (678) 336-7140
Phone (678) 336-7142
Fax (678) 336-7144
JOB NO. 1190708

HERITAGE PARK IMPROVEMENTS

STRUCTURAL DETAILS

SHEET IDENTIFICATION NUMBER
S-502

10/14/2019 3:32:05 PM C:\Users\parkk\Documents\1190708_SS_Heritage_Park_Struct_v19_parkk@pondco.com.rvt

Copyright © 2019 by Pond & Company. All rights reserved. No copying or duplication of these documents is allowed without the express written agreement of Pond & Company.

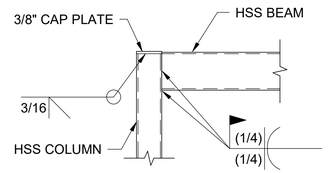

BEAM TO COLUMN CONNECTION

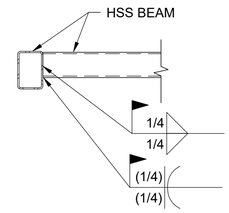

BEAM TO BEAM CONNECTION

D2 TYPICAL HSS MEMBER CONNECTION

SCALE: N.T.S.

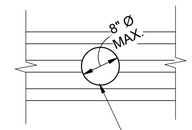

FASTEN BOTH SIDES WITH
ADDITIONAL SIDE LAP FASTENERS

PENETRATES (1) RIB

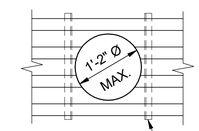

L1x1x1/8 SCREWED WITH #10 TEK
SCREWS TO FOUR RIBS

PENETRATES (2) RIBS

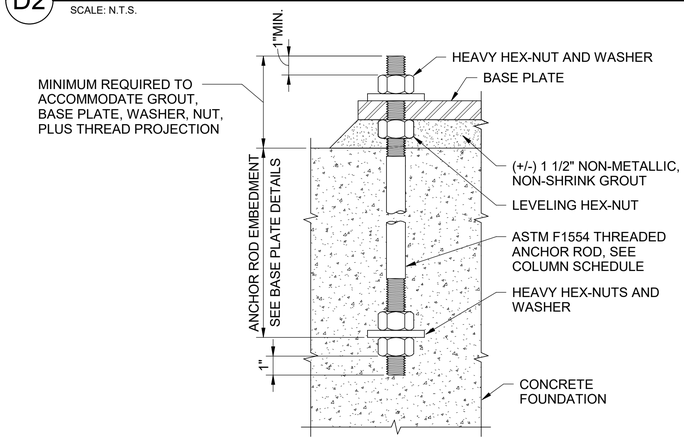

C2 TYPICAL ANCHOR BOLT

SCALE: N.T.S.

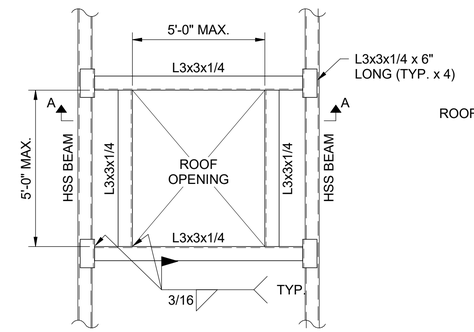

PARTIAL PLAN VIEW

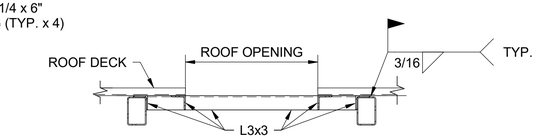

VIEW A-A

PENETRATES MORE THAN (3) RIBS

C3 TYPICAL ROOF DECK OPENING

SCALE: N.T.S.

MARK	DESCRIPTION	DATE
1	Bid Set	10.14.2019
0	Land Disturbance Permit	09.24.2019

SANDY SPRINGS
GEORGIA

GEORGIA REGISTERED No. PE044592 PROFESSIONAL ENGINEER BENJAMIN ORELLIN

SEAL

ISSUE DATE: SEP 24 2019
SOLICITATION NO.:
CONTRACT NO.:
FILE NUMBER:
PLOT DATE:

DESIGNED BY: KP
DWN BY: KP
CKD BY: KP
SUBMITTED BY: BJ
FILE NAME:
SIZE: 22"X34"
PLOT SCALE:

CITY OF SANDY SPRINGS:
SANDY SPRINGS CITY HALL
1 GALAMBOS WAY
SANDY SPRINGS, GA 30328

POND
3500 Parkway Lane
Peachtree Corners, GA
30092, Suite 350
Phone (678) 336-7740
Fax (678) 336-7744

JOB NO. 1190708

HERITAGE PARK
IMPROVEMENTS

STRUCTURAL DETAILS

SHEET
IDENTIFICATION
NUMBER
S-503

10/14/2019 3:32:06 PM C:\Users\parkk\Documents\1190708_SS_Heritage_Park_Struct_v19_parkk@pondco.com.rvt

Copyright © 2019 by Pond & Company. All rights reserved. No copying or duplication of these documents is allowed without the express written agreement of Pond & Company.

SHEET NAMING CONVENTION

M-001A

- 2 DIGIT DISCIPLINE DESIGNATOR (IF ONLY ONE LETTER IS USED, THE SECOND LETTER IS REPLACED WITH A DASH "-" AS A PLACEHOLDER)**
- 1 DIGIT SHEET TYPE DESIGNATOR
  - 0 - GENERAL
  - 1 - PLANS
  - 2 - ELEVATIONS
  - 3 - SECTIONS
  - 4 - ENLARGED PLANS
  - 5 - DETAILS
  - 6 - SCHEDULES AND DIAGRAMS
  - 7 - VARIES
  - 8 - VARIES
  - 9 - 3D VIEWS (ISO, PERSPECTIVES)
- 2 DIGIT SEQUENTIAL # (01-99) (FIRST DIGIT INDICATES PLAN TYPE. SECOND DIGIT INDICATES FLOOR)
- 1 DIGIT AREA DESIGNATOR (AREA DESIGNATOR ONLY USED WHEN PLANS ARE SUBDIVIDED INTO AREAS.)

NOTES:

1. ALL EXISTING EQUIPMENT IS SHOWN IN THIN LINEWORK. ALL DEMOLISHED EQUIPMENT IS SHOWN IN BOLD LINEWORK, DASHED, AND HATCHED. ALL NEW OR RELOCATED EQUIPMENT IS SHOWN IN BOLD LINEWORK. BELOW IS AN EXAMPLE OF EACH:

EXISTING EQUIPMENT

EQUIPMENT TO BE DEMOLISHED

NEW OR RELOCATED EQUIPMENT

HVAC DESIGN CRITERIA

PROJECT LOCATION: SANDY SPRINGS, GA
LATITUDE: 33.875 N
LONGITUDE: 84.302 W
ELEVATION: 1002 FT.

STANDARD DESIGN CONDITIONS
WINTER DESIGN DRY BULB (99.0%): 25.5 °F
SUMMER DESIGN DRY BULB (1.0%): 91.8 °F
SUMMER DESIGN WET BULB (1.0%): 73.3 °F

DEHUMIDIFICATION DESIGN CONDITIONS
DEWPOINT (1.0%): 73.0 °F
HUMIDITY RATIO (1.0%): 127.0
MEAN COINCIDENT DRY BULB (1.0%): 79.0 °F

INDOOR DESIGN CONDITIONS

	COOLING			HEATING	
SPACE CATEGORY	OCC. DRY BULB (°F)	UNOCC. DRY BULB (°F)	OCC. DP (°F)	OCC. DRY BULB (°F)	UNOCC. DRY BULB (°F)
ADMINISTRATION SPACES	78	85	57.9	68	55
COMM ROOMS	75	75	62.5	40	40
ENTRANCE VESTIBULES	N / A	N / A	N / A	55	40
MECHANICAL ROOMS	AMB. + 10°F	AMB. + 10°F	N / A	55	55
STORAGE	78	85	57.9	68	55

GENERAL MECHANICAL NOTES

1. INSTALLATION OF HVAC WORK SHALL BE COORDINATED WITH OTHER TRADES BEFORE ANY INSTALLATION IS MADE. DUCTWORK SHOWN ON PLANS IS SCHEMATIC. DUCTWORK SHALL BE INSTALLED TIGHT TO STRUCTURE. ALL TRANSITIONS, ELBOWS, ETC. REQUIRED TO AVOID CONFLICTS & MAXIMIZE CEILING HEIGHTS. EQUIPMENT, PIPING OR DUCTWORK INTERFERING WITH OTHER TRADES SHALL BE RELOCATED AS REQUIRED AT NO ADDITIONAL COST TO THE OWNER.
2. COORDINATE MECHANICAL AND ELECTRICAL SUCH THAT MECHANICAL PIPING, DUCTWORK AND EQUIPMENT IS NOT LOCATED OVER OR ABOVE ANY ELECTRICAL, COMMUNICATIONS, OR DATA EQUIPMENT.
3. AT START OF CONSTRUCTION PREPARE TYPED LISTS OF EQUIPMENT THAT ARE SUPPLIED REQUIRING ELECTRICAL WORK, AND SEND LISTS TO THE ELECTRICAL CONTRACTOR FOR REVIEW AND COORDINATION.
4. WRITTEN DIMENSIONS ON DRAWINGS SHALL HAVE PRECEDENCE OVER SCALED DIMENSIONS.
5. EQUIPMENT SHALL BE INSTALLED IN ACCORDANCE WITH MANUFACTURER'S APPROVED CLEARANCE, UNIFIED FACILITIES CRITERIA, AND INTERNATIONAL BUILDING CODE / INTERNATIONAL MECHANICAL CODE.
6. INSTALLATION OF EQUIPMENT SHALL PERMIT ACCESSIBILITY FOR SERVICE AND/OR REPLACEMENT WITHOUT NECESSITATING REMOVAL OR MODIFICATION TO OTHER PIPING, WIRING, OR EQUIPMENT.
7. CEILING-MOUNTED EQUIPMENT SHALL BE INSTALLED IN SUCH A MANNER THAT LIGHTS, PIPING, DUCTWORK, ETC., DO NOT BLOCK ACCESS TO EQUIPMENT AND RELATED ACCESSORIES.
8. COORDINATE WALL, FLOOR AND ROOF PENETRATIONS WITH THE GENERAL CONTRACTOR.
9. CAULK WITH SILICONE ALL GAPS BETWEEN WALL, CEILING AND FLOOR OPENINGS AND HVAC EQUIPMENT PENETRATIONS. PATCH LARGE GAPS BEFORE CAULKING IS APPLIED. [REFER TO SPECIFICATION SECTION 23 00 00 - AIR SUPPLY, DISTRIBUTION, VENTILATION, AND EXHAUST SYSTEMS, SUBSECTION 2.1.2].
10. SUPPLEMENTAL STEEL MEMBERS REQUIRED TO SUPPORT HVAC EQUIPMENT FROM MAIN STRUCTURE SHALL BE PROVIDED BY THE HVAC CONTRACTOR UNLESS SPECIFICALLY NOTED OTHERWISE. REFER TO STRUCTURAL DRAWINGS AND SPECIFICATIONS FOR CONSTRUCTION TYPES. PROCURE AND INSTALL UPON APPROVAL FROM ARCHITECT. PROVIDE STRUCTURAL STEEL SUPPORT SUBMITTAL TO ENGINEER OF RECORD FOR REVIEW.
11. DUCTWORK AIR DISTRIBUTION SYSTEMS SHALL BE INSTALLED IN ACCORDANCE WITH SMACNA STANDARDS AND THE PRESSURE CLASSIFICATION OF EACH INDIVIDUAL DUCTWORK SYSTEM.
12. VOLUME DAMPERS SHALL BE PROVIDED AT EACH NEW MAIN BRANCH TAKE-OFF AND IN SUCH OTHER LOCATIONS WHERE REQUIRED TO PROPERLY BALANCE THE SYSTEM.
13. INSTRUMENT TEST HOLES SHALL BE PROVIDED IN AIR DISTRIBUTION SYSTEMS WHEREVER VOLUME DAMPERS ARE SHOWN.
14. SQUARE ELBOWS SHALL ONLY BE USED WHERE SPACE LIMITATIONS PREVENT USE OF 1.5 RADIUS ELBOW AND ONLY UPON APPROVAL OF ARCHITECT. PROVIDE TURNING VANES IN ALL 45° AND 90° SQUARE ELBOWS. TURNING VANES SHALL BE SINGLE THICKNESS TYPE WITHOUT RAILING EDGE. IF TURNING VANES LONGER THAN 36 INCHES ARE REQUIRED, THEY SHALL BE DOUBLE THICKNESS TYPE.
15. DUCTWORK RUNOUTS TO AIR DISTRIBUTION DEVICES SHALL BE SAME DIAMETER AS AIR DISTRIBUTION DEVICE INLET CONNECTION UNLESS OTHERWISE NOTED ON THE DRAWINGS.
16. FLEXIBLE DUCTWORK RUNOUTS FROM BRANCH DUCTS TO AIR DISTRIBUTION DEVICES SHALL NOT EXCEED 5 FEET IN LENGTH. BENDS IN FLEXIBLE DUCTWORK SHALL NOT EXCEED A MAXIMUM OF 45 DEGREE CHANGE OF DIRECTION AND BE SUPPORTED SUCH THAT THE BEND RADIUS IS NOT RESTRICTIVE TO AIR FLOW THROUGH THE DUCT. FLEXIBLE DUCTWORK SHALL NOT BE CRUSHED OR DISTORTED IN ITS FINAL CONFIGURATION.
17. ROUND DUCTWORK CONNECTIONS BETWEEN MAIN DUCT AND TERMINAL UNITS SHALL BE RIGID DUCT OF THE SAME DIAMETER AS TERMINAL UNIT INLET CONNECTION UNLESS OTHERWISE NOTED ON THE DRAWINGS.
18. PROVIDE SHEETMETAL TRANSITIONS AT AIR HANDLING UNITS, HEAT PUMP UNITS, FANS, AND OTHER SIMILAR HVAC EQUIPMENT. TRANSITION TO FULL SIZE OF CONNECTION ON UNIT. FLEXIBLE DUCT CONNECTORS SHALL BE USED ON FINAL CONNECTION TO AIR HANDLING EQUIPMENT.
19. OPEN-ENDED AIR TRANSFER DUCTS AND OPEN-ENDED RETURN AIR DUCTS IN THE CEILING PLENUM SHALL BE UNOBSTRUCTED FOR A MINIMUM DISTANCE OF 24 INCHES FROM THE OPENING TO ALLOW FOR FREE AIRFLOW. OPEN-ENDED AIR TRANSFER DUCTS AND OPEN-ENDED RETURN AIR DUCTS IN THE CEILING PLENUM SHALL HAVE WIRE MESH SCREENS. MESH SCREENS SHALL BE ALUMINUM WITH 1/8" SQUARE HOLES. SIZE FOR MAXIMUM VELOCITY OF 500 FPM.
20. TRANSFER DUCTS SHALL BE SIZED FOR MAX VELOCITY ALLOWED OF 500 FPM. OPEN-ENDED TRANSFER DUCTS SHALL HAVE DUCT 90° ELBOW FOR SOUND ATTENUATION.
21. LOUVERED SUPPLY AIR DIFFUSERS SHALL BE 4-WAY BLOW UNLESS OTHERWISE SHOWN BY FLOW ARROWS ON THE DRAWINGS. LINEAR DIFFUSERS SHALL BE ADJUSTABLE 2-WAY FLOW. PROVIDE BATT INSULATION ON DIFFUSER AND GRILLES THAT ARE EXPOSED TO CEILING PLENUM.
22. DIMENSIONS SHOWN FOR DIFFUSERS AND GRILLES ARE NECK DIMENSIONS.
23. EXACT LOCATION OF CEILING DIFFUSERS, GRILLES AND REGISTERS SHALL BE DETERMINED BY ARCHITECTURAL REFLECTED CEILING PLAN.
24. BLANK OFF AND INSULATE INACTIVE PORTIONS OF LOUVERS. ENTIRE LOUVERS NOT UTILIZED SHALL BE BLANKED OFF AND INSULATED BY THE LOUVER MANUFACTURER. REFER TO ARCHITECTURAL DRAWINGS FOR LOUVER LOCATIONS AND HVAC DRAWINGS FOR HVAC EQUIPMENT CONNECTIONS.
25. LOUVER PLENUMS SHALL BE PITCHED DOWN TOWARD THE BOTTOM OF THE LOUVER. WHERE THIS IS NOT POSSIBLE, PROVIDE 3/4" DRAIN PIPING WITH P-TRAP FROM BOTTOM OF LOUVER TO NO MORE THAN 6" ABOVE NEAREST SANITARY DRAIN. DRAIN LINE SHALL SLOPE DOWN TOWARDS DISCHARGE LOCATION AT A MINIMUM OF 1/8" PER LINEAR FOOT.
26. PROVIDE ACCESS PANELS TO ACCESS DAMPERS, EQUIPMENT, AND VALVES LOCATED ABOVE HARD CEILINGS OR IN WALLS. ACTUAL LOCATIONS SHALL BE FIELD DETERMINED.
27. EXACT LOCATIONS OF THERMOSTATS, CO2 SENSORS, AND EMCS SENSORS SHALL BE COORDINATED WITH FINAL LOCATIONS OF WALL-MOUNTED ARCHITECTURAL AND ELECTRICAL EQUIPMENT. MOUNT THERMOSTATS AND CO2 SENSORS MINIMUM 48" AFF.
28. SUPPLY, RETURN, AND OUTDOOR AIR DUCTWORK SHALL BE INSULATED TO MEET OR EXCEED ASHRAE 90.1. EXTERIOR SUPPLY AND RETURN AIR DUCTWORK SHALL BE PROVIDED WITH WEATHER-PROOF COVER.
29. PROVIDE SUPPORTS FOR DUCTWORK IN ACCORDANCE WITH SPECIFICATIONS.
30. FOR WALL, FLOOR, AND SLAB PENETRATIONS SEAL AND PATCH ALL UNUSED PENETRATION SPACE TO MATCH EXISTING OR AS SHOWN ON MECHANICAL DETAILS SHEET.
31. INSTALL EXPOSED CONTROL WIRING IN CONDUIT. SEE DIVISION 26 SPECIFICATIONS FOR REQUIREMENTS.
32. MANUFACTURER NAME AND MODEL NUMBERS ARE BASIS OF DESIGN AND ARE SHOWN FOR INFORMATION ONLY. REFER TO SPECIFICATIONS FOR COMPLETE REQUIREMENTS.
33. SPECIFICATIONS TAKE PRECEDENCE OVER DRAWINGS. HOWEVER, ITEMS SHOWN ON DRAWING BUT NOT IN THE SPECIFICATIONS ARE REQUIRED WITHIN THE PROJECT SCOPE. IN ADDITION, SPECIFIC ITEMS SHOWN ON THE DRAWINGS TAKE PRECEDENCE OVER SPECIFICATIONS IN CASES WHERE THE SPECIFICATION HAS OPTIONS.
34. ALL EQUIPMENT SHALL BE INSTALLED IN ACCORDANCE WITH MANUFACTURER'S APPROVED PUBLISHED LITERATURE.
35. DUCT SIZES SHOWN ARE METAL DUCT SIZE.
36. EXPOSED DUCTWORK, WITH THE EXCEPTION OF DUCTWORK IN MECHANICAL ROOMS SHALL BE DOUBLE-WALL, SPIRAL DUCTWORK WITH COATING.
37. IF ASBESTOS IS FOUND, STOP WORK IMMEDIATELY AND NOTIFY OWNER AND GENERAL CONTRACTOR. OWNER IS RESPONSIBLE FOR ABATEMENT OF ASBESTOS.
38. NOT ALL MECHANICAL ABBREVIATIONS SHOWN WILL BE USED FOR THIS PROJECT.

SANDY SPRINGS GEORGIA

GEORGIA REGISTERED No. PE044675 PROFESSIONAL ENGINEER BRENDEN T. FRAZIER 10-11-19 SEAL

MARK	DESCRIPTION	DATE
0	BID SET	10/11/19

DESIGNED BY: SG
DWN BY: SG
CKD BY: WWC
SUBMITTED BY:
FILE NAME:
SIZE: 22"X34"
PLOT SCALE:
ISSUE DATE: 10/11/19
SOLICITATION NO.: SOLICITATION NO.
CONTRACT NO.: CONTRACT NUMBER
FILE NUMBER: XX-X-XXXX
PLOT DATE:

CITY OF SANDY SPRINGS:
SANDY SPRINGS CITY HALL
1 GALAMBOS WAY
SANDY SPRINGS, GA 30328

POND
3600 Parkway Lane
Norcross, Georgia 30092, Suite 500
Phone (678) 336-7740
Fax (678) 336-7744

JOB NO. 1190708

HERITAGE PARK IMPROVEMENTS

MECHANICAL GENERAL NOTES AND DESIGN CRITERIA

SHEET IDENTIFICATION NUMBER
M-001

10/10/2019 3:56:18 PM C:\Users\frazierb\Documents\1190708_SS_Heritage_Park_MEP_FP_v19_BrendenF.rvt

Copyright © 2019 by Pond & Company. All rights reserved. No copying or duplication of these documents is allowed without the express written agreement of Pond & Company.

GENERAL MECH. ABBREVIATIONS

@	AT
&	AND
AFF	ABOVE FINISHED FLOOR
A/C	ABOVE CEILING
AC	AIR CONDITIONER
AD	AUTOMATIC DAMPER
ADJ	ADJUSTABLE
AFMS	AIRFLOW MEASURING STATION
AFUE	ANNUAL FUEL UTILIZATION EFFICIENCY
AHU	AIR HANDLING UNIT
AMB	AMBIENT
AMCA	AIR MOVEMENT AND CONTROL ASSOCIATION
ARCH	ARCHITECT, ARCHITECTURAL
AS	AIR SEPARATOR
ASHRAE	AMERICAN SOCIETY OF HEATING, REFRIGERATING, AND AIR CONDITIONING ENGINEERS
ASTM	AMERICAN SOCIETY FOR TESTING AND MATERIALS
AUX	AUXILIARY
AWS	AMERICAN WELDING SOCIETY
AWG	AMERICAN WIRE GAUGE
B	BOILER
BD	BACKDRAFT DAMPER
BLDG	BUILDING
BOD	BOTTOM OF DUCT
B/F	BELOW FLOOR
B/S	BELOW SLAB
BTU, BTUH	BRITISH THERMAL UNITS, BTUs PER HOUR
C.A.	COMBUSTION AIR INTAKE
CAV	CONSTANT AIR VOLUME
CCC	CLOSED CIRCUIT COOLER
CD	CONDENSATE DRAIN
CFM	CUBIC FEET PER MINUTE
CLG	COOLING
CMU	CONCRETE MASONRY UNIT
CO	CLEANOUT
CO2	CARBON DIOXIDE
CONC	CONCRETE
CONN	CONNECT, CONNECTING, CONNECTION
CONT	CONTINUED
COP	COEFFICIENT OF PERFORMANCE
COR	CONTRACTING OFFICER'S (OWNER'S) REPRESENTATIVE
CU	CONDENSING UNIT
CH	CHILLER
CHWR	CHILLED WATER RETURN
CHWS	CHILLED WATER SUPPLY
CWR	CONDENSER WATER RETURN
CWS	CONDENSER WATER SUPPLY
D	DEPTH
DB, Tdb	DRY BULB (TEMPERATURE)
dBA	DECIBELS
DDC	DIRECT DIGITAL CONTROLS
DEG. F (°F)	DEGREES FAHRENHEIT
DF	DESTRATIFICATION FAN
DH	DEHUMIDIFIER
DIA	DIAMETER
DIV	DIVISION
DN	DOWN
DP, PD	DIFFERENTIAL PRESSURE, PRESSURE DROP
DSCU	DUCTLESS SPLIT CONDENSING UNIT
DSFC	DUCTLESS SPLIT FAN COIL UNIT
DSHP	DUCTLESS SPLIT HEAT PUMP
DSS	DUCTLESS SPLIT SYSTEM (INDOOR UNIT)
DWG	DRAWING
DX	DIRECT EXPANSION
EA	EXHAUST AIR
EAT	ENTERING AIR TEMPERATURE
EER	ENERGY EFFICIENCY RATIO
EF	EXHAUST FAN
EFF	EFFICIENCY
ELEC	ELECTRICAL
ERU	ENERGY RECOVERY UNIT
ERV	ENERGY RECOVERY VENTILATOR
ET	EXPANSION TANK
ESP	EXTERNAL STATIC PRESSURE
EUH	ELECTRIC UNIT HEATER
EWT	ENTERING WATER TEMPERATURE
EXT	EXTERIOR
EXH	EXHAUST
EXST, (E)	EXISTING
FCU	FAN COIL UNIT
FD	FIRE DAMPER
FFE	FINISHED FLOOR ELEVATION
FLA	FULL LOAD AMPS
FOB	FLAT ON BOTTOM
FOT	FLAT ON TOP
FSD	FIRE SMOKE DAMPER
FT	FOOT, FEET
FT WG	FEET WATER GAUGE
FV	FLUE VENT
GA	GAGE
GC	GENERAL CONTRACTOR
GPM	GALLONS PER MINUTE
H	HEIGHT
HGRH	HOT GAS REHEAT
HP	HEAT PUMP
HR	HOUR
HSPF	HEATING SEASONAL PERFORMANCE FACTOR
HTG	HEATING
HTR	HEATER
HVAC	HEATING, VENTILATING, AND AIR CONDITIONING
HX	HEAT EXCHANGER
HZ	HERTZ
IMC	INTERNATIONAL MECHANICAL CODE
IN	INCH, INCHES
IN WC	INCHES WATER COLUMN
IN WG	INCHES WATER GAUGE
IPLV	INTEGRATED PART LOAD VALUE
KW	KILOWATTS
L	LENGTH, LOUVER (WALL)
LAT	LEAVING AIR TEMPERATURE
LBS	POUNDS
LBF/IN2	POUNDS FORCE PER SQUARE INCH
LWT	LEAVING WATER TEMPERATURE
MAX	MAXIMUM
MBH	1000 BRITISH THERMAL UNITS
MCA	MINIMUM CIRCUIT AMPACITY
MERV	MINIMUM EFFICIENCY REPORTING VALUE
MECH	MECHANICAL
MFR, MFG	MANUFACTURER, MANUFACTURING
MIN	MINIMUM
MOCP, MOP	MAXIMUM OVER CURRENT PROTECTION
MOD	MOTOR OPERATED DAMPER
MSS	MANUFACTURER'S STANDARDIZATION SOCIETY
MTD	MOUNTED
MUW	MAKE-UP WATER (POTABLE/ DOMESTIC)
MVD	MANUAL VOLUME DAMPER
N.C.	NORMALLY CLOSED
NO.	NUMBER
N.O.	NORMALLY OPEN
NPLV	NET PART LOAD VALUE
NTS	NOT TO SCALE
OA	OUTSIDE AIR
OD	OUTSIDE DAMPER
PD	PRESSURE DROP
PH	PHASE
PLBG	PLUMBING
PPM	PARTS PER MILLION
PRV	PRESSURE RELIEF VALVE
QTY	QUANTITY
RA	RETURN AIR
RG	RETURN GRILLE
RH	RELATIVE HUMIDITY
RHG	REFRIGERANT HOT GAS
RL	REFRIGERANT LIQUID
RM	ROOM
RPM	REVOLUTIONS PER MINUTE
RS	REFRIGERANT SUCTION
SA	SUPPLY AIR
SD	SMOKE DAMPER, SMOKE DETECTOR
SEER	SEASONAL ENERGY EFFICIENCY RATIO
SF	SUPPLY FAN
SMACNA	SHEET METAL AND AIR CONDITIONING CONTRACTOR'S NATIONAL ASSOCIATION
SP	STATIC PRESSURE
SS	STAINLESS STEEL
TSTAT	THERMOSTAT
TEMP	TEMPERATURE
TG	TRANSFER GRILLE
THA	TOTAL HEAT ABSORPTION
THR	TOTAL HEAT REJECTION
TP	TEMPERATURE/ PRESSURE TEST PORT
TYP	TYPICAL
UH	UNIT HEATER
UL	UNDERWRITER'S LABORATORY
UMCS	UTILITY MONITORING AND CONTROL SYSTEM
V	VOLTAGE, VOLTS
VAV	VARIABLE AIR VOLUME
VD	VOLUME DAMPER
VFD	VARIABLE FREQUENCY DRIVE
VSD	VARIABLE SPEED DRIVE
W	WATT(S)
W/	WITH
W/O	WITHOUT
WB, Twb	WET BULB (TEMPERATURE)
WD	WIDE, WIDTH
WMS	WIRE MESH SCREEN

DUCTWORK LEGEND

- 24"Ø — ROUND DUCT. DIAMETER INDICATED IN INCHES.
- 30"/14" — FLAT OVAL DUCT. SIZE INDICATED IN INCHES, FIRST NUMBER IS SIDE SHOWN
- 30"x14" — RECTANGULAR DUCT. SIZE INDICATED IN INCHES, FIRST NUMBER IS SIDE SHOWN.
- DASHED LINES INDICATE 2" ACOUSTICAL LINER
- 90 DEGREE DUCT ELBOW WITH TURNING VANES
- RADIUS DUCT ELBOW - ROUND OR RECTANGULAR (MIN. 1.5 RADIUS UNLESS OTHERWISE NOTED)
- RECTANGULAR DUCT BRANCH TAKE-OFF WITH 45 DEGREE BRANCH INLET
- SQUARE TO ROUND DUCT BRANCH TAKE-OFF WITH 45 DEGREE BRANCH INLET
- FLARED SPIN-IN WITH DAMPER AND FLEX DUCT (DIFFUSER CONNECTION)
- ROUND DUCT BRANCH TAKE-OFF FROM RECTANGULAR MAIN WITH CONICAL TAP
- DUCT SIZE TRANSITION
- DUCT SIZE TRANSITION RECTANGULAR TO ROUND
- FLEXIBLE DUCT CONNECTION
- SUPPLY OR OUTSIDE AIR DUCT UP
- SUPPLY OR OUTSIDE AIR DUCT DOWN
- RETURN AIR DUCT UP
- RETURN AIR DUCT DOWN
- EXHAUST AIR DUCT UP
- EXHAUST AIR DUCT DOWN
- IN-LINE 90 DEGREE RISE/DROP IN SUPPLY DUCT (RIGHT SIDE IS HIGHER)
- IN-LINE 90 DEGREE RISE/DROP IN SUPPLY DUCT (LEFT SIDE IS HIGHER)
- IN-LINE 90 DEGREE RISE/DROP IN RETURN DUCT (RIGHT SIDE IS HIGHER)
- IN-LINE 90 DEGREE RISE/DROP IN RETURN DUCT (LEFT SIDE IS HIGHER)
- IN-LINE 90 DEGREE RISE/DROP IN EXHAUST DUCT (RIGHT SIDE IS HIGHER)
- IN-LINE 90 DEGREE RISE/DROP IN EXHAUST DUCT (LEFT SIDE IS HIGHER)
- H — DUCT MOUNTED HUMIDIFIER
- VD — VOLUME/BALANCING DAMPER (LABEL MAY BE OMITTED)
- BD — BACKDRAFT DAMPER (COUNTER-BALANCED UNLESS OTHERWISE NOTED)
- AD — DAMPER TYPE:
  AD - AUTOMATIC DAMPER
  MD - MOTORIZED DAMPER
- FD — FIRE DAMPER TYPE:
  FD - FIRE DAMPER, 1 HOUR RATING
  FD(3) - FIRE DAMPER, 3 HOUR RATING
- SD — SMOKE DAMPER
- FSD — COMBINATION FIRE/SMOKE DAMPER

MISCELLANEOUS LEGEND

- SUPPLY AIR DIFFUSER - FLOW ARROWS INDICATE AIR PATTERN. NO FLOW ARROWS SHOWN INDICATES 4-WAY PATTERN.
- RETURN AIR DEVICE
- EXHAUST AIR DEVICE
- RC — REMOTE CONTROLLER (VRF SYSTEM)
- T — THERMOSTAT
- H — HUMIDISTAT
- TH — THERMOSTAT/ HUMIDISTAT
- $ — START/ STOP SWITCH
- T — TEMPERATURE SENSOR
- H — HUMIDITY SENSOR
- F — FIRESTAT
- SD — DUCT SMOKE DETECTOR
- SP — STATIC PRESSURE SENSOR
- C — CARBON DIOXIDE SENSOR
- J — 120 VOLT STAND BY POWER JUNCTION BOX PROVIDED BY THE ELECTRICAL CONTRACTOR JUNCTION BOX IS DEDICATED FOR USE BY THE CONTROLS CONTRACTOR.
- VFD — VARIABLE FREQUENCY DRIVE
- A — CONTROL WIRING
- A — DRAWING NOTE REFERENCE
- ROUND
- OVAL OR FLAT OVAL
- SERVICE CLEARANCE

AIR DISTRIBUTION DEVICE TAGS

SUPPLY/RETURN/EXHAUST TAGS

A / 400 — DIFFUSER TYPE; AIRFLOW; FLOW ARROW

DRAWING REFERENCE KEY

RE:2/M501 — REFER TO; DETAIL NUMBER; SHEET NUMBER OF DETAIL

2 / M501

NORTH ARROW

PLAN NORTH; TRUE NORTH

DEMOLITION KEY

- DEMOLISHED
- CONNECT TO EXISTING
- DISCONNECT FROM EXISTING

SANDY SPRINGS GEORGIA

GEORGIA REGISTERED No. PE044675 PROFESSIONAL ENGINEER BRENDEN T. FRAZIER 10-11-19 SEAL

MARK	DESCRIPTION	DATE
0	BID SET	10/11/19

DESIGNED BY: SG
DWN BY: SG
CKD BY: MWG
SUBMITTED BY:
FILE NAME:
SIZE: 22"X34"
PLOT SCALE:
ISSUE DATE: 10/11/19
SOLICITATION NO.: SOLXXXXXX
CONTRACT NO.:
CONTRACT NUMBER
FILE NUNBER: XX-X-XXX
PLOT DATE:

CITY OF SANDY SPRINGS:
SANDY SPRINGS CITY HALL
1 GALAMBOS WAY
SANDY SPRINGS, GA 30328

POND
3600 Parkway Lane
Peachtree Corners, GA 30092, Suite 500
Phone (678) 336-7140
Fax (678) 336-7744

JOB NO. 1190708

HERITAGE PARK IMPROVEMENTS

MECHANICAL ABBREVIATIONS AND LEGENDS

SHEET IDENTIFICATION NUMBER
M-002

Copyright © 2019 by Pond & Company. All rights reserved. No copying or duplication of these documents is allowed without the express written agreement of Pond & Company.

10/10/2019 3:56:19 PM C:\Users\frazierb\Documents\1190708_SS_Heritage_Park_MEP_FP_v19_BrendenF.rvt

GENERAL MECHANICAL

QUALITY ASSURANCE

A. THE MECHANICAL EQUIPMENT AND INSTALLATION SHALL CONFORM TO THE FOLLOWING CODES, WITH GEORGIA AMMENDMENTS:
   1. THE INTERNATIONAL BUILDING CODE, 2012 ED.
   2. THE INTERNATIONAL MECHANICAL CODE, 2012 ED.
   3. THE INTERNATIONAL PLUMBING CODE, 2012 ED.
   4. THE INTERNATIONAL ENERGY CONSERVATION CODE, 2009 ED.
   5. THE NATIONAL ELECTRIC CODE, 2017 ED. (NO GEORGIA AMENDMENTS)
B. THE MECHANICAL EQUIPMENT AND INSTALLATION SHALL CONFORM TO THE FOLLOWING STANDARDS:
   1. ASSOCIATE AIR BALANCE COUNCIL (AABC): NATIONAL STANDARD FOR TOTAL SYSTEM BALANCE.
   2. NATIONAL FIRE PROTECTION ASSOCIATION (NFPA): STANDARD 90A: INSTALLATION OF AIR CONDITIONING AND VENTILATING SYSTEMS.
C. PUBLICATION DATES: WHERE THE DATE OF ISSUE OF A REFERENCE STANDARD IS NOT SPECIFIED, COMPLY WITH THE STANDARD THAT IS EFFECTIVE AS OF DATE OF CONTRACT DOCUMENT.
D. PERMITS
   1. OBTAIN ALL PERMITS AND INSPECTIONS FOR THE INSTALLATION OF THIS WORK AND PAY ALL CHARGES INCIDENT THERETO. DELIVER TO THE OWNER ALL CERTIFICATES OF SAID INSPECTION ISSUED BY AUTHORITIES HAVING JURISDICTION.
E. WORKMANSHIP AND MATERIALS COVERED BY THESE SPECIFICATIONS SHALL CONFORM TO ALL ORDINANCES AND REGULATIONS OF THE CITY, COUNTY AND/OR OTHER AUTHORITIES HAVING JURISDICTION.
F. OPERATIONS AND MAINTENANCE MANUALS FOR ALL SCHEDULED EQUIPMENT SHALL BE PROVIDED TO OWNER AS PART OF FINAL ACCEPTANCE.

GUARANTY

A. THE COMPONENTS OF THE MECHANICAL SYSTEM FURNISHED UNDER THIS DIVISION OF THE SPECIFICATIONS SHALL BE GUARANTEED FOR A PERIOD OF ONE YEAR FROM THE DATE OF ACCEPTANCE THEREOF, EITHER FOR BENEFICIAL USE OR FINAL ACCEPTANCE, WHICHEVER IS EARLIER, AGAINST DEFECTIVE MATERIAL, DESIGN, AND WORKMANSHIP.

ELECTRICAL WORK

A. ALL ELECTRICAL EQUIPMENT FURNISHED UNDER THIS DIVISION OF THESE SPECIFICATIONS SHALL COMPLY THE ELECTRICAL SYSTEM CHARACTERISTICS INDICATED ON THE ELECTRICAL DRAWINGS.
B. MOTOR CONTROL COMPONENTS FURNISHED AS AN INTEGRAL PART OF MECHANICAL EQUIPMENT SHALL CONFORM TO REQUIREMENTS OF ELECTRICAL DRAWINGS.
C. POWER WIRING SHALL BE PROVIDED BY ELECTRICAL.
D. WIRING AND CONDUIT BETWEEN VFD AND MOTOR SHALL BE UNDER THIS DIVISION UNLESS IT IS INDICATED ON THE ELECTRICAL DRAWINGS. WIRING AND CONDUIT SHALL BE PER NEC AND ELECTRICAL SPECIFICATIONS.

PAINTING

A. FACTORY PAINTED EQUIPMENT THAT HAS BEEN SCRATCHED OR MARRED SHALL BE REPAINTED TO MATCH ORIGINAL COLOR.
B. STEEL EQUIPMENT HANGARS, SUPPORTS, AND UNINSULATED BLACK STEEL PIPE EXPOSED TO SIGHT INSIDE THE BUILDING WHICH ARE NOT PROVIDED WITH A FACTORY APPLIED PRIME COAT SHALL BE CLEANED OF RUST, GREASE AND SCALE. AFTER CLEANING HANGARS, SUPPORTS AND PIPE, A FILED-APPLIED PRIME COAT SHALL BE PROVIDED. IN ADDITION, SUCH ITEMS IN FINISHED SPACES SHALL BE PROVIDED WITH TWO COATS OF FINISH PAINT IN A COLOR TO MATCH ADJACENT SURFACES.

CLEANING AND ADJUSTING

A. ALL EQUIPMENT, PIPE, VALVES, AND FITTINGS SHALL BE CLEANED OF GREASE, OIL, PAINT SPOTS, METAL CUTTINGS, SLUDGE, AND CONSTRUCTION DEBRIS.
B. DUCTS, PLENUMS AND CASINGS SHALL BE CLEANED OF ALL DEBRIS AND BLOWN FREE OF ALL PARTICLES OF RUBBISH AND DUST BEFORE INSTALLING OUTLET FACES.
C. BEARINGS SHALL BE LUBRICATED AS RECOMMENDED BY THE EQUIPMENT MANUFACTURER.
D. TEMPORARY FILTERS SHALL BE PROVIDED FOR FANS THAT ARE USED DURING CONSTRUCTION. AT THE TIME OF STARTING THE BALANCING OF THE AIR DISTRIBUTION SYSTEM, NEW FILTERS SHALL BE INSTALLED.

TESTING DUCT SYSTEMS

A. GENERAL: CONCEALED DUCT WORK AND INSULATED DUCT WORK SHALL BE TESTED IN PLACE BEFORE CONCEALING OR COVERING. A TEST SHALL BE CONDUCTED IN THE PRESENCE OF THE ARCHITECT OR HIS DESIGNATED REPRESENTATIVE. EQUIPMENT, MATERIALS, AND INSTRUMENTS FOR TESTING SHALL BE FURNISHED BY THE CONTRACTOR WITHOUT ADDITIONAL COST TO THE OWNER. EQUIPMENT NOT RATED FOR THE RESPECTIVE TEST PRESSURE SHALL BE ISOLATED FROM THE SYSTEM DURING THE TEST.
B. AIR DISTRIBUTION SYSTEMS
   1. DUCTWORK SHALL BE MADE AIRTIGHT PRIOR TO COVERING OR CONCEALING TO THE POINT THAT NO LEAKAGE CAN BE DETECTED BY THE SENSES OF HEARING OR FEELING AT ALL DUCT JOINTS AND SEAMS.

METAL DUCTS AND ACCESSORIES

A. DUCT CONSTRUCTION, INCLUDING SHEET METAL THICKNESSES, SEAM AND JOINT CONSTRUCTION, REINFORCEMENTS, AND HANGERS AND SUPPORTS, SHALL COMPLY WITH SMACNA'S "HVAC DUCT CONSTRUCTION STANDARDS - METAL AND FLEXIBLE" AND WITH PERFORMANCE REQUIREMENTS AND DESIGN CRITERIA INDICATED HEREINAFTER COMPLY WITH REQUIREMENTS IN ASHRAE/IES 90.1, SECTION 6.4.4 - "HVAC SYSTEM CONSTRUCTION AND INSULATION."
   1. CONSTRUCT DUCTS OF GALVANIZED SHEET STEEL UNLESS OTHERWISE INDICATED.
   2. ELBOWS, TRANSITIONS, OFFSETS, BRANCH CONNECTIONS, AND OTHER DUCT CONSTRUCTION: SELECT TYPES AND FABRICATE IN ACCORDANCE WITH SMACNA'S "HVAC DUCT CONSTRUCTION STANDARDS - METAL AND FLEXIBLE," CH. 4, "FITTINGS AND OTHER CONSTRUCTION"
B. DUCT LINER SHALL COMPLY WITH ASTM C1071, NFPA 90A, OR NFPA 90B; AND WITH NAIMA AH124, "FIBROUS GLASS DUCT LINER STANDARD." ADHERE A SINGLE LAYER OF 1" THICK OF DUCT LINER WITH AT LEAST 90 PERCENT ADHESIVE COVERAGE AT LINER CONTACT SURFACE AREA.
C. SEALANT AND GASKET REQUIREMENTS: SURFACE-BURNING CHARACTERISTICS FOR SEALANTS AND GASKETS SHALL BE A MAXIMUM FLAME-SPREAD INDEX OF 25 AND A MAXIMUM SMOKE-DEVELOPED INDEX OF 50 WHEN TESTED IN ACCORDANCE WITH UL 723; CERTIFIED BY AN NRTL.

HANGERS AND SUPPORTS

A. GALVANIZED-STEEL RODS AND NUTS.
B. STRAP AND ROD SIZES: COMPLY WITH SMACNA'S "HVAC DUCT CONSTRUCTION STANDARDS - METAL AND FLEXIBLE," TABLE 5-1 (TABLE 5-1M), "RECTANGULAR DUCT HANGERS MINIMUM SIZE," AND TABLE 5-2, "MINIMUM HANGER SIZES FOR ROUND DUCT."

DUCT CONSTRUCTION/INSTALLATION

A. DRAWING PLANS, SCHEMATICS, AND DIAGRAMS INDICATE GENERAL LOCATION AND ARRANGEMENT OF DUCT SYSTEM. INDICATED DUCT LOCATIONS, CONFIGURATIONS, AND ARRANGEMENTS WERE USED TO SIZE DUCTS AND CALCULATE FRICTION LOSS FOR AIR-HANDLING EQUIPMENT SIZING AND FOR OTHER DESIGN CONSIDERATIONS. INSTALL DUCT SYSTEMS AS INDICATED UNLESS DEVIATIONS TO LAYOUT ARE APPROVED ON SHOP DRAWINGS AND COORDINATION DRAWINGS.
B. INSTALL FACTORY- OR SHOP-FABRICATED FITTINGS FOR CHANGES IN DIRECTION, SIZE, AND SHAPE AND FOR BRANCH CONNECTIONS.
C. WHERE DUCTS PASS THROUGH NON-FIRE-RATED INTERIOR PARTITIONS AND EXTERIOR WALLS AND ARE EXPOSED TO VIEW, COVER THE OPENING BETWEEN THE PARTITION AND DUCT OR DUCT INSULATION WITH SHEET METAL FLANGES OF SAME METAL THICKNESS AS THE DUCT. OVERLAP OPENINGS ON FOUR SIDES BY AT LEAST 1-1/2 INCHES (38 MM).
D. ELBOWS: USE LONG-RADIUS ELBOWS WHEREVER THEY FIT. FABRICATE 90-DEGREE RECTANGULAR MITERED ELBOWS TO INCLUDE TURNING VANES.
E. BRANCH CONNECTIONS: USE LATERAL OR CONICAL BRANCH CONNECTIONS.
F. FABRICATE ALL DUCTS TO ACHIEVE SMACNA PRESSURE CLASS, SEAL CLASS, AND LEAKAGE CLASS OF 150% OF THE SCHEDULED FAN EXTERNAL STATIC PRESSURE OR AS INDICATED BELOW, WHICHEVER IS GREATER:
   1. RETURN AND EXHAUST DUCTS: PRESSURE CLASS NEGATIVE 2-INCH WG, SEAL CLASS B

HANGER AND SUPPORT INSTALLATION

A. COMPLY WITH SMACNA'S "HVAC DUCT CONSTRUCTION STANDARDS - METAL AND FLEXIBLE," CHAPTER 5, "HANGERS AND SUPPORTS."
B. BUILDING ATTACHMENTS: CONCRETE INSERTS, POWDER-ACTUATED FASTENERS, OR STRUCTURAL-STEEL FASTENERS APPROPRIATE FOR CONSTRUCTION MATERIALS TO WHICH HANGERS ARE BEING ATTACHED.
C. HANGER SPACING: COMPLY WITH SMACNA'S "HVAC DUCT CONSTRUCTION STANDARDS - METAL AND FLEXIBLE," TABLE 5-1 (TABLE 5-1M), "RECTANGULAR DUCT HANGERS MINIMUM SIZE," AND TABLE 5-2, "MINIMUM HANGER SIZES FOR ROUND DUCT," FOR MAXIMUM HANGER SPACING; INSTALL HANGERS AND SUPPORTS WITHIN 24 INCHES (610 MM) OF EACH ELBOW AND WITHIN 48 INCHES (1220 MM) OF EACH BRANCH INTERSECTION.

FIELD QUALITY CONTROL: COMPLY WITH SMACNA'S "HVAC AIR DUCT LEAKAGE TEST MANUAL."

MANUAL DAMPERS

A. DAMPERS SHALL BE SINGLE BLADE BUTTERFLY TYPE IN DUCTS UP TO AND INCLUDING 18" X 12" SINGLE; FOR DUCTS LARGE THAN 18" X 12", IN EITHER OR BOTH DIMENSIONS, THE DAMPERS SHALL BE THE MULTI-LOUVER TYPE.
B. SINGLE BLADE BUTTERFLY DAMPERS SHALL BE CONSTRUCTED OF NOT LESS THAN 16-GAUGE GALVANIZED STEEL BLADE MOUNTED IN A GALVANIZED STEEL FRAME. DAMPER SHALL BE PROVIDED WITH AN EXTENDED ROD TO PERMIT INSTALLATION OF A DAMPER REGULATOR.
C. MULTI-LOUVER DAMPERS SHALL BE OPPOSED BLADE TYPE, CONSTRUCTED OF NOT LESS THAN 16-GAUGE GALVANIZED STEEL BLADE MOUNTED IN GALVANIZED STEEL CHANNEL FRAME. BLADE SPACING SHALL NOT EXCEED 6-INCHES AND THE TOP AND BOTTOM EDGES OF THE BLADES SHALL BE CRIMPED TO STIFFEN THE BLADES. DAMPER BLADES SHALL BE INTERCONNECTED BY RODS AND LINKAGES TO PROVIDE SIMULTANEOUS OPERATION OF ALL BLADES. DAMPER SHALL BE PROVIDED WITH AN EXTENDED ROD TO PERMIT INSTALLATION OF A DAMPER REGULATOR.

AIR DISTRIBUTION DEVICES

GENERAL

A. A. FINISH
   1. ALUMINUM GRILLES AND REGISTERS WHICH ARE CEILING MOUNTED SHALL BE PROVIDED WITH A FACTORY APPLIED WHITE BAKED ENAMEL FINISH UNLESS INDICATED OTHERWISE, HEREIN OR ON THE DRAWINGS.
B. MOUNTING
   1. MODEL NUMBERS INDICATED ON DRAWINGS ARE FOR SURFACE MOUNTING IN EXPOSED TEE-BAR GRIDS OR FOR INTEGRAL MOUNTING IN EXPOSED TEE-BAR GRIDS. WHERE GRILLES, REGISTERS OR DIFFUSERS ARE TO BE INSTALLED IN CONCEALED SPINE CEILINGS OR PLASTER CEILINGS THE MOUNTING FRAME SHALL BE ADJUSTED TO MATCH THE CEILING REQUIREMENTS. IN PLASTER CEILINGS, PROVIDE PLASTER FRAMES.
C. TYPE 'A' CEILING GRILLES SHALL BE THE EGGCRATE TYPE. GRILLES MUST PROVIDE A FREE AREA OF AT LEAST 90%. OUTER BORDERS SHALL BE CONSTRUCTED OF HEAVY EXTRUDED ALUMINUM WITH A THICKNESS OF 0.040-0.050 INCH AND SHALL HAVE COUNTERSUNK SCREW HOLES. BORDER WIDTH SHALL BE 1¼ INCHES ON ALL SIDES AND SHALL BE INTERLOCKED AT THE FOUR CORNERS AND MECHANICALLY STAKED TO FORM A RIGID FRAME.

INSTALLATION

A. GRILLES AND REGISTERS MOUNTED IN WALLS SHALL BE SECURED TO DUCTWORK WITH SHEET METAL SCREWS.
B. GRILLES, REGISTERS, AND CEILING DIFFUSERS NOT SIZED TO FIT CEILING GRID SYSTEMS SHALL BE SECURED TO DUCTWORK WITH SHEET METAL SCREWS. WHERE DIFFUSER IS ATTACHED TO DUCT SYSTEM WITH FLEXIBLE DUCT, DIFFUSERS SHALL BE SUPPORTED FROM STRUCTURES WITH FOUR GALVANIZED STEEL WIRE HANGERS.
C. GRILLES, REGISTERS, AND CEILING DIFFUSERS SIZED TO FIT CEILING GRID SYSTEM SHALL BE SUPPORTED FROM GRID SYSTEM.

FANS

GENERAL
A. TESTING AND RATINGS
   1. FANS SHALL BE TESTED AND RATED IN ACCORDANCE WITH AMCA 210.
B. BALANCING
   1. CENTRIFUGAL FAN WHEELS SHALL BE STATICALLY AND DYNAMICALLY BALANCED.
C. DISCONNECTS
   1. SAFETY DISCONNECT SWITCHES SHALL CONFORM TO REQUIREMENTS OF ELECTRICAL.

INLINE CABINET FANS

A. FANS SHALL BE IN-LINE CABINET TYPE WITH SQUARE OR RECTANGULAR HOUSING AND BACK DRAFT DAMPER. FAN SHALL BE DESIGNED FOR HORIZONTAL OR VERTICAL MOUNTING
B. FAN HOUSING SHALL BE STEEL WITH FACTORY APPLIED BAKED ENAMEL PAINT ONE EXTERIOR. HOUSING SHALL BE INTERNALLY INSULATED WITH1/2" THICK (MINIMUM) COATED FIBERGLAS INSULATION. INSULATION SHALL COMPLY WITH ASTM E84 AND NFPA 255 FOR MAXIMUM RATINGS OF FLAME - 25 AND SMOKE 50, HOUSING SHALL HAVE MOUNTING BRACKETS AT EACH CORNER.
C. FAN WHEEL SHALL BE BACKWARD INCLINED CENTRIFUGAL TYPE WITH ALUMINUM CONSTRUCTION. ON BELT DRIVEN UNITS, SHAFT BEARINGS SHALL BE SELF-ALIGNING, PILLOW BLOCK BALL TYPE. BEARINGS NOT PERMANENTLY SEALED AND LUBRICATED SHALL HAVE GREASE FITTINGS.
D. MOTOR AND DRIVE SHALL BE MOUNTED ON VIBRATION ISOLATORS. FAN SHALL HAVE A FACTORY INSTALLED DISCONNECT SWITCH MOUNTED ON EXTERIOR OF HOUSING AND PRE-WIRED TO FAN MOTOR.
E. DIRECT DRIVEN FANS SHALL BE PROVIDED WITH AN ELECTRONIC SPEED CONTROLLER MOUNTED TO FAN.
F. FAN SHALL BE:

	DIRECT DRIVE	BELT DRIVE
ACME	MODEL XD	MODEL XB
BREIDERT	MODEL SID	MODEL SIB
CARNES	MODEL VID	MODEL VIB
GREENHECK	MODEL SQ	MODEL BSQ
PENNBARRY	MODEL SXD	MODEL SXB

INSTALLATION

A. IN-LINE CABINET FANS SHALL BE SUSPENDED FROM STRUCTURE WITH HANGER RODS AT EACH CORNER.

ELECTRIC UNIT HEATERS

A. THE HEATING EQUIPMENT SHALL INCLUDE AN ELECTRIC AUTOMATIC FAN FORCED AIR HEATER. THE HEATER SHALL BE DESIGNED FOR RECESSED WALL MOUNTING. HEATERS SHALL BE UL LISTED OR EQUIVALENT (ETL). HEATER SHALL HAVE BUILT IN THERMOSTAT AND DISCONNECT SWITCH. HEATER SHALL BE VANDAL RESISTANT.
B. THE BACKBOX SHALL BE DESIGNED FOR DUTY AS A RECESSED ROUGH-IN BOX IN EITHER MASONRY OR FRAME INSTALLATIONS AND IS ALSO USED WITH THE SURFACE MOUNTING FRAME IN SURFACE MOUNTING INSTALLATIONS. THE BACKBOX SHALL BE HEAVY GAUGE GALVANIZED STEEL AND SHALL CONTAIN KNOCKOUTS FOR POWER.
C. A DOUBLE-POLE SINGLE THROW ON/OFF SWITCH SHALL BE MOUNTED ON THE BACK BOX FOR POSITIVE DISCONNECT OF POWER SUPPLY. IT SHALL BE CONCEALED BEHIND THE FRONT COVER.
D. THE FAN MOTOR SHALL BE IMPEDANCE PROTECTED, PERMANENTLY LUBRICATED, AND WITH TOTALLY ENCLOSED ROTOR. FAN CONTROL SHALL BE OF THE BI-METALLIC, SNAPACTION TYPE AND SHALL ACTIVATE FAN AFTER HEATING ELEMENT REACHES OPERATING TEMPERATURE, AND CONTINUE TO OPERATE THE FAN AFTER THE THERMOSTAT IS SATISFIED AND UNTIL ALL HEATED AIR HAS BEEN DISCHARGED. THE THERMOSTAT SHALL BE SINGLE POLE TYPE ON ALL MODELS. MANUAL-RESET THERMAL CUTOUT SHALL BE BI-METALLIC, SNAPACTION TYPE DESIGNED TO SHUT OFF HEAT IN THE EVENT OF OVERHEATING. THE FAN SHALL BE FOUR-BLADED ALUMINUM.
E. THE LOUVERED FRONT COVER SHALL BE OF HEAVY GAUGE STEEL WITH A POLYESTER POWDER COAT FINISH. A PLUG BUTTON SHALL BE PROVIDED TO REPLACE THE THERMOSTAT KNOB AND RENDER THE UNIT TAMPER-RESISTANT.
F. ELECTRIC UNTI HEATER SHALL BE:
   1. MARLY
   2. QMARK
   3. TRANE
   4. BERKO
   5. INDEECO

LOUVERS

A. STATIONARY LOUVERS
   1. LOUVERS SHALL BE THE STORM PROOF DRAINABLE BLADE TYPE, 6" (150MM) DEEP, CONSTRUCTED OF EXTRUDED ALUMINUM (6063-T5 ALLOY) WITH ALL JOINTS WELDED AND PROVIDED WITH 3/4" EXPANDED ALUMINUM MESH BIRDSCREEN ON THE REAR FACE OF THE LOUVER.
   2. LOUVER PERFORMANCE SHALL BE AMCA CERTIFIED AND UNIT SHALL BEAR THE AMCA SEAL.
   3. LOUVER BLADES SHALL BE NOT LESS THAN .094" THICK, HEAD/SILL .094" AND JAMBS .102" THICK. EXCEPT AS OTHERWISE SPECIFICALLY INDICATED HEREIN, BLADE ANGLE SHALL BE 35 DEGREES AND CENTERLINE SPACING OF BLADES SHALL NOT EXCEED 3-1/2".
   4. LOUVER BLADES OVER 48" LONG SHALL BE PROVIDED WITH INTERMEDIATE ALUMINUM BRACES ON THE REAR FACE OF THE LOUVER. [PROVIDE WITH 12 GA. (2.75MM) EXTRUDED ALUMINUM RAIN SILL.]
   5. LOUVER SHALL BE PROVIDED WITH A COLOR ANODIZED FINISH. COLOR SHALL BE SELECTED BY THE ARCHITECT.
   6. STATIONARY LOUVERS SHALL BE:
      A. AEROLITE; K6776.
      B. ARROW UNITED; EA415D.
      C. DOWCO; DBE-6.
      D. RUSKIN; ELF SERIES.
      E. GREENKECK; ESD SERIES
B. MOTOR-OPERATED COMBINATION LOUVER-DAMPER
   1. LOUVERS SHALL BE DRAINABLE BLADE TYPE WITH INTEGRAL JAMB DOWNSPOUTS AS SPECIFIED IN PARAGRAPH A, ABOVE, WITH THE ADDITION OF TIGHT SEALING ADJUSTABLE BLADES.
   2. ADJUSTABLE BLADES SHALL BE TIGHT SEALING TYPE CONSTRUCTED OF .125" THICK ALUMINUM WITH EXTRUDED VINYL BLADE SEALS AND STAINLESS STEEL JAMB SEALS. LINKAGE SHALL BE CONCEALED, JAMB MOUNTED TYPE WITH PLATED STEEL SHAFTS, ARMS AND CONNECTING RODS AND BRASS PIVOTS.
   3. MOTOR-OPERATED COMBINATION LOUVER-DAMPER SHALL BE:
      A. ARROW UNITED; TYPE 480.
      B. DOWCO; C-DWE-46.
      C. RUSKIN; ELC445.
      D. GREENHECK; ECD SERIES
C. MOTOR OPERATED DAMPERS
   1. ADJUSTABLE BLADES SHALL BE TIGHT SEALING TYPE CONSTRUCTED OF .125" THICK ALUMINUM WITH EXTRUDED VINYL BLADE SEALS AND STAINLESS STEEL JAMB SEALS. LINKAGE SHALL BE CONCEALED, JAMB-MOUNTED TYPE WITH PLATED STEEL SHAFTS, ARMS AND CONNECTING RODS AND BRASS PIVOTS.
   2. MOTOR OPERATOR SHALL BE TWO POSITION NORMALLY OPEN TYPE DESIGNED TO OPERATE ON 120 VOLT, SINGLE PHASE POWER. MOTOR SHALL BE LOCATED IN A CONCEALED COMPARTMENT IN THE BOTTOM OF THE LOUVER FRAME. ACCESS PANELS SHALL BE SECURED TO INSIDE OF HOUSING FOR ACCESS TO THE MOTOR OPERATOR.
   3. MOTOR OPERATED DAMPERS SHALL BE:
      A. BELIMO
      B. GREENHECK
      C. OR APPROVED EQUAL

INSTALLATION

A. INSTALL LOUVERS AND VENTS IN ACCORDANCE WITH MANUFACTURER'S INSTRUCTIONS.
B. CAULK ALL AROUND LOUVER FRAME TO MAKE INSTALLATION WATERTIGHT.

ROOF HOODS

GENERAL

A. ROOF HOOD HOUSING TO BE CONSTRUCTED OF CORROSION RESISTANT SPUN ALUMINUM.
B. ROOF HOOD TO BE INSTALLED WITH MANUFACTURER BIRD SCREEN OPTION.
C. PROVIDE AND INSTALL WITH BACKDRAFT DAMPER.
D. HOODS SHALL BE
   a. GREENHECK
   b. RUSKIN
   c. APPROVED EQUAL

INSTALLATION

A. ROOF HOOD TO BE SECURELY MOUNTED ON CURB TO BE PROVIDED BY MANUFACTURER.
B. ROOF CURB TO MATCH ROOF PITCH TO INSURE INSTALLATION OF HOOD IS ON A FLAT SURFACE.
C. ALL PENETRATIONS TO BE CAULKED AND SEALED TO ENSURE A WATERTIGHT SEAL.
D. SECURE HOOD TO CURB WITH MINIMUM OF EIGHT SHEET METAL SCREWS.

DIGITAL TIME SWITCH

A. TIME SWITCH SHALL BE 7-DAY DIGITAL TIME SWITCH WITH 120VAC INPUT VOLTAGE, POWER OUTAGE BACKUP AND POLYCARBONATE INDOOR/ OUTDOOR NEMA 3R ENCLOSURE.

TEST AND BALANCE

EQUIPMENT

A. INSTRUMENTS USED FOR BALANCING SHALL HAVE BEEN CALIBRATED WITHIN 6 MONTHS PRIOR TO THE BALANCING OF THE SYSTEMS.
B. ALL INSTRUMENTS REQUIRED TO BALANCE THE SYSTEM SHALL BE PROVIDED AT THE CONTRACTOR'S EXPENSE.

GENERAL BALANCING

A. AIR
   1. ADJUST AND BALANCE AIR SYSTEMS INDICATED HEREINBEFORE TO OBTAIN DESIGN FLOW RATES FOR SYSTEMS AS A WHOLE AND EACH INLET AND OUTLET. USE BALANCING DAMPERS AND/OR FLOW SETTING DEVICES FOR INLET, OUTLET AND BRANCH ADJUSTMENTS. USE FAN SPEED ADJUSTMENT FOR BELT DRIVE FANS.
   2. PITOT TUBE TRAVERSES SHALL BE PERFORMED IN ACCORDANCE WITH ASHRAE FUNDAMENTALS.

REPORT

A. THE REPORT OF PERFORMANCE TESTING AND BALANCING SHALL INCLUDE DATA LISTED BELOW:
   1. NAME AND ADDRESS OF PROJECT, NAME AND ADDRESS OF CONTRACTOR, DATES OF ALL TESTS, NAME AND TELEPHONE NUMBER OF THE TEST ENGINEER.
   2. GRILLES, REGISTERS AND DIFFUSERS:
      A. FAN SYSTEM AND/OR ZONE NUMBER
      B. ROOM NUMBER
      C. SIZE OF INLET OR OUTLET
      D. MANUFACTURER'S EFFECTIVE DATA
      E. REQUIRED, INITIAL, AND FINAL FLOW AND VELOCITY
   3. FANS:
      A. SYSTEM AND/OR FAN NUMBER
      B. FAN MANUFACTURER, SERIAL NUMBER, AND MODEL NUMBER
      C. MOTOR MANUFACTURER, HORSEPOWER, VOLTAGE, PHASE, RPM, TYPE AND SERVICE FACTOR, AMPERAGE NAMEPLATE RATING.
      D. SCHEDULED DATA ON DRAWINGS OR IN SPECIFICATIONS
      E. FINAL AIR FLOW, RPM, TOTAL AND SUCTION STATIC PRESSURE, MOTOR AMPERAGE, AND BRAKE HORSEPOWER.
B. ANY DEVIATIONS FROM DESIGN DATA SHALL BE EXPLAINED IN THE REPORT - POSSIBLE REASONS FOR AND SOLUTIONS TO.
C. REPORT SHALL BE SIGNED AND DATED BY BALANCE ENGINEER.
D. TEST AND BALANCE SHALL NOT BE PERFORMED UNTIL SYSTEM INSTALLATION IS COMPLETE.

SANDY SPRINGS GEORGIA

GEORGIA REGISTERED No. PE044675 PROFESSIONAL ENGINEER BRENDEN T. FRAZIER 10-11-19

SEAL

MARK	DESCRIPTION	DATE
0	BID SET	10/11/19

ISSUE DATE: 10/11/19
DESIGNED BY: SG
DWN BY: SG | CKD BY: WWC
SOLICITATION NO.: SOL-XX-X-XXXX
SUBMITTED BY:
CONTRACT NO.: CONTRACT NUMBER
FILE NAME:
FILE NUNBER: XX-X-XXXX
SIZE: 22"x34" | PLOT SCALE: | PLOT DATE:

CITY OF SANDY SPRINGS:
SANDY SPRINGS CITY HALL
1 GALAMBOS WAY
SANDY SPRINGS, GA 30328

POND
3500 Parkway Lane
Peachtree Corners, GA 30092, Suite 500
Phone (678) 336-7740
Fax (678) 336-7744
JOB NO. 1190708

HERITAGE PARK IMPROVEMENTS

MECHANICAL SPECIFICATIONS

SHEET IDENTIFICATION NUMBER

M-003

10/10/2019 3:56:19 PM C:\Users\frazierb\Documents\1190708_SS_Heritage_Park_MEP_FP_v19_BrendenF.rvt

Copyright © 2019 by Pond & Company. All rights reserved. No copying or duplication of these documents is allowed without the express written agreement of Pond & Company.

SHEET NOTES:

1. REFER TO M-001 FOR MECHANICAL GENERAL NOTES AND ABBREVIATIONS.
2. REFER TO M-002 FOR MECHANICAL LEGENDS AND HVAC DESIGN CRITERIA.

KEYNOTES:

KEY #	KEYNOTE DESCRIPTION
1	6"x6" INSIDE CLEAR (INCLUDING 1" LINER) DUCT DIMENSION MAKEUP AIR TRANSFER OPENING ABOVE CEILING. TURN DUCT DOWN IN UTILITY CHASE. COVER OPEN END WITH 1/4"x1/4" HARDWARE CLOTH. REFER TO DETAIL C4/M-501.
2	SUSPEND ELECTRIC UNIT HEATER FROM STRUCTURE WITH BOTTOM AT MINIMUM 8'-6" AFF.
3	ROUTE DUCTWORK TIGHT TO STRUCTURE.
4	OFFSET EXHAUST DUCT UP TO BE ROUTED ABOVE RESTROOM CEILING.
5	PROVIDE 7 POINT DIGITAL TIME SWITCH FOR EXHAUST FAN EF-1 CONTROL.
6	TRANSITION TO FULL SIZE OF CONNECTION ON LOUVER.
7	OFFSET EXHAUST DUCTWORK DOWN IN CHASE TO BELOW STRUCTURAL BEAM. ROUTE DUCTWORK TIGHT TO STRUCTURE.
8	ROUTE EXHAUST DUCTWORK ABOVE CEILING UP TO GRAVITY RELIEF HOOD ON ROOF.

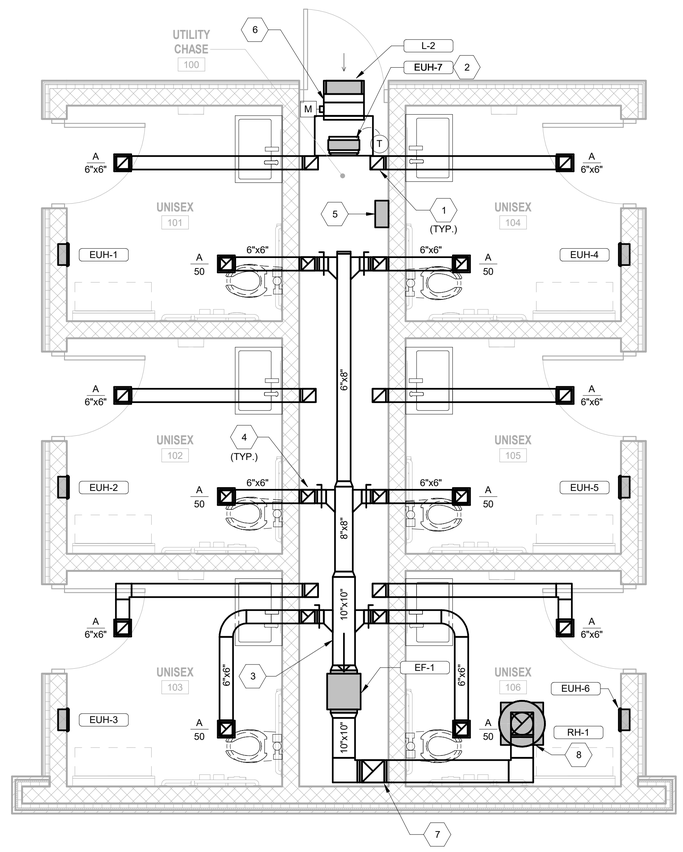

A3 MECHANICAL HVAC PLAN

SCALE: 3/8" = 1'-0"

2 0 2 4 6

SCALE: 3/8" = 1'-0"

NORTH

SANDY SPRINGS GEORGIA

GEORGIA REGISTERED No. PE044675 PROFESSIONAL ENGINEER BRENDEN T. FRAZIER 10-11-19

SEAL

MARK	DESCRIPTION	DATE
0	BID SET	10/11/19

DESIGNED BY: SG
DWN BY: SG
CKD BY: WWC
SUBMITTED BY:
FILE NAME:
SIZE: 22"x34"
PLOT SCALE:
ISSUE DATE: 10/11/19
SOLICITATION NO.: SOLXXXXXX
CONTRACT NO.:
FILE NUMBER: XX-X-XXXX
PLOT DATE:

CITY OF SANDY SPRINGS:
SANDY SPRINGS CITY HALL
1 GALAMBOS WAY
SANDY SPRINGS, GA 30328

POND
3600 Parkway Lane
Peachtree Corners, GA 30092, Suite 500
Phone (678) 335-7710
Fax (678) 335-7744

JOB NO. 1190708

HERITAGE PARK IMPROVEMENTS

MECHANICAL HVAC PLAN

SHEET IDENTIFICATION NUMBER

M-101

10/10/2019 3:56:20 PM C:\Users\frazierb\Documents\1190708_SS_Heritage_Park_MEP_FP_v19_BrendenF.rvt

Copyright © 2019 by Pond & Company. All rights reserved. No copying or duplication of these documents is allowed without the express written agreement of Pond & Company.

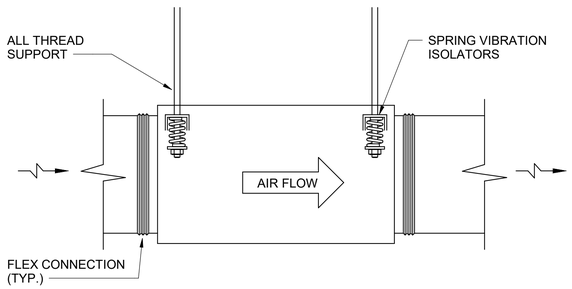

C1 INLINE EXHAUST FAN DETAIL

SCALE: N.T.S.

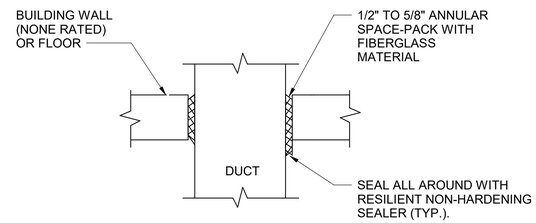

C3 DUCT PENETRATION DETAIL

SCALE: N.T.S.

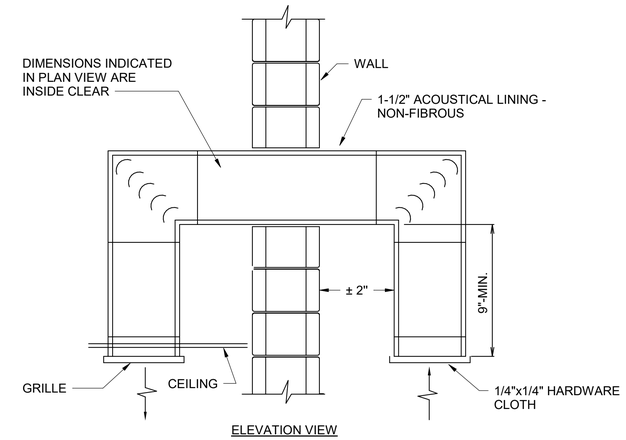

C4 TRANSFER DUCT DETAIL

SCALE: N.T.S.

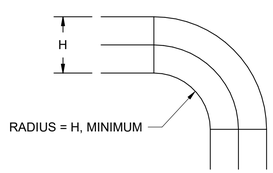

CURVED ELBOW

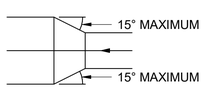

DIVERGING DUCT TRANSITION

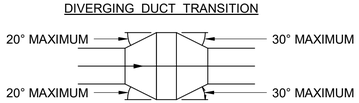

TRANSITION AT EQUIPMENT

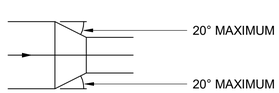

CONVERGING DUCT TRANSITION

NOTE:
UNLESS NOTED OTHERWISE ON PLANS, ANGLES SHOWN SHALL APPLY.

A1 TYPICAL DUCT TRANSITION DETAIL

SCALE: N.T.S.

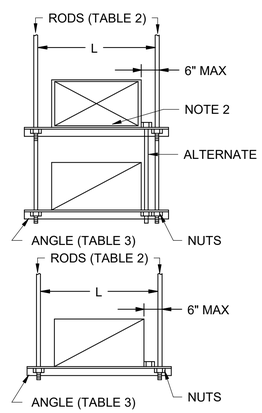

TABLE 1 STRAP HANGERS (PAIR) SPACED			
W+D MAX.	10"-0" MAX.	8'-0" MAX.	5'-0" OR LESS
72"	1"x22 GA	1"x22 GA	1"x22 GA
96"		1"x20 GA	1"x22 GA
120"		1"x18 GA	1"x22 GA
168"			1"x18 GA
192"			1"x16 GA
192+"	SPECIAL ANALYSIS REQUIRED		

TABLE 2 ALLOWABLE HANGER LOAD MAX.			
STRAPS	LBS.	RODS	LBS.
2-1"X22 GA	520	2-1/4" DIA.	540
2-1"X20 GA	640	2-3/8" DIA.	1360
2-1"X18 GA	840	2-1/2" DIA.	2500
2-1"X16 GA	1400	2-5/8" DIA.	4000
		2-3/4" DIA.	6000

TABLE 3 TRAPEZE ANGLE LOAD MAX.		
L	2"x2"x1/4"	2-1/2"x2-1/2"x1/4"
36"	1200 LBS	1940 LBS
48"	1160 LBS	1900 LBS
60"	1060 LBS	1800 LBS
72"	900 LBS	1640 LBS
84"	660 LBS	1400 LBS
96"	320 LBS	1060 LBS

NOTES:
1. TABULATED DATA FROM SMACNA ALLOWS FOR DUCT REINFORCING AND INSULATION, BUT NO EXTERNAL LOAD.
2. PROVIDE HIGH DENSITY INSERT AT TRAPEZE FOR INSULATED DUCTS.

A2 RECTANGULAR DUCT HANGER DETAIL

SCALE: N.T.S.

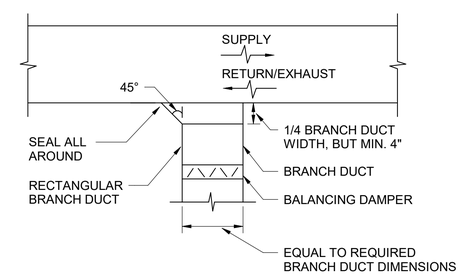

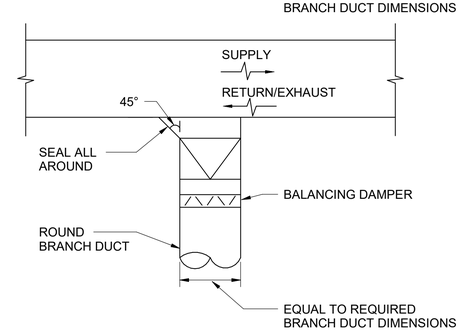

NOTE:
1. STANDARD BELLMOUTH FITTINGS (WITH RADIUS = DIAMETER / 5) MAY BE SUBSTITUTED FOR BRANCH FITTINGS.

A4 BRANCH DUCT CONNECTION DETAIL

SCALE: N.T.S.

SANDY SPRINGS GEORGIA

GEORGIA REGISTERED No. PE044675 PROFESSIONAL ENGINEER BRENDEN T. FRAZIER 10-11-19 SEAL

MARK	DESCRIPTION	DATE
0	BID SET	10/11/19

DESIGNED BY: SG
DWN BY: CKD BY: MWWC
SUBMITTED BY: SG
FILE NAME:
SIZE: 22"X34"
PLOT SCALE:
ISSUE DATE: 10/11/19
SOLICITATION NO.: SOLICITATION NO.:
CONTRACT NO.: CONTRACT NUMBER
FILE NUMBER: XX-X-XXXX
PLOT DATE:

CITY OF SANDY SPRINGS:
SANDY SPRINGS CITY HALL
1 GALAMBOS WAY
SANDY SPRINGS, GA 30328

POND
3640 Parkway Lane
Norcross, Georgia 30092, Suite 500
Phone (678) 336-7740
Fax (678) 336-7744
JOB NO. 1190708

HERITAGE PARK IMPROVEMENTS

MECHANICAL DETAILS

SHEET IDENTIFICATION NUMBER
M-501

Copyright © 2019 by Pond & Company. All rights reserved. No copying or duplication of these documents is allowed without the express written agreement of Pond & Company.

10/10/2019 3:56:20 PM C:\Users\frazierb\Documents\1190708_SS_Heritage_Park_MEP_FP_v19_BrendenF.rvt

SEQUENCE OF OPERATION - EXHAUST FAN

EQUIPMENT

THE AIRSIDE SYSTEM CONSISTS OF THE FOLLOWING EQUIPMENT:

EXHAUST FAN, EF-1 & L-2 MOD

RUN CONDITIONS

THE EXHAUST FAN SHALL RUN ON A TIME CLOCK BASED UPON OWNER SCHEDULE (ADJ).

FAN SHALL BE INTERLOCKED WITH MOTORIZED DAMPER AT LOUVER L-2. DAMPER SHALL OPEN WHEN FAN IS ENERGIZED.

SEQUENCE OF OPERATION - UNIT HEATERS (RESTROOMS)

EQUIPMENT

THE AIRSIDE SYSTEM CONSISTS OF THE FOLLOWING EQUIPMENT:

UNIT HEATER, EUH-1 THROUGH EUH-6

RUN CONDITIONS

THE UNIT HEATER SHALL RUN BASED UPON AN INTEGRAL THERMOSTAT TO MAINTAIN TEMPERATURE OF 70°F (ADJ).

SEQUENCE OF OPERATION - UNIT HEATERS (FREEZE PROTECTION)

EQUIPMENT

THE AIRSIDE SYSTEM CONSISTS OF THE FOLLOWING EQUIPMENT:

UNIT HEATER, EUH-7

RUN CONDITIONS

THE UNIT HEATER SHALL RUN BASED UPON A REMOTE THERMOSTAT TO MAINTAIN TEMPERATURE OF 55°F (ADJ).

ELECTRIC UNIT HEATER SCHEDULE

	LOCATION		BASIS OF DESIGN						ELECTRICAL DATA		
ID	NAME	NO.	MANUFACTURER	MODEL NO.	TYPE	AIRFLOW (CFM)	HEATING CAPACITY (kW)	UNIT WEIGHT (LBS)	VOLTS (V)	PHASE	REMARKS
EUH-1	UNISEX	101	QMARK	SED2024	FAN FORCED	50	1.5	12	208	1	1 - 3, 8
EUH-2	UNISEX	102	QMARK	SED2024	FAN FORCED	50	1.5	12	208	1	1 - 3, 8
EUH-3	UNISEX	103	QMARK	SED2024	FAN FORCED	50	1.5	12	208	1	1 - 3, 8
EUH-4	UNISEX	104	QMARK	SED2024	FAN FORCED	50	1.5	12	208	1	1 - 3, 8
EUH-5	UNISEX	105	QMARK	SED2024	FAN FORCED	50	1.5	12	208	1	1 - 3, 8
EUH-6	UNISEX	106	QMARK	SED2024	FAN FORCED	50	1.5	12	208	1	1 - 3, 8
EUH-7	UTILITY CHASE	100	QMARK	MUH03-81	FAN FORCED	350	3.0	27	208	1	1 - 2, 4 - 7

REMARKS:

1. INTEGRAL STARTER AND DISCONNECT.
2. INTEGRAL THERMOSTAT.
3. PROVIDE WITH RECESSED MOUNTING KIT.
4. PROVIDE WALL-MOUNTED THERMOSTAT.
5. PROVIDE MANUFACTURER'S MOUNTING BRACKET.
6. PROVIDE NEOPRENE ISOLATORS.
7. MOUNT BOTTOM OF HEATER 8'-6" ABOVE FINISHED FLOOR.
8. MOUNT BOTTOM OF HEATER 1'-0" ABOVE FINISHED FLOOR.

LOUVER SCHEDULE

	LOCATION				BASIS OF DESIGN							DIMENSIONS			
ID	NAME	NO.	SERVES	SYSTEM	MANUFACTURER	MODEL NO.	MATERIAL	DESIGN AIRFLOW (CFM)	FREE AREA (SF)	FREE AREA VELOCITY (FPM)	MAX PRESSURE DROP (IN. WG.)	WIDTH	HEIGHT	UNIT WEIGHT (LBS)	REMARKS
L-2	UTILITY CHASE	100	RESTROOMS	INTAKE	GREENHECK	ESD-635	ALUMINUM	300	0.7	457	0.03	1' - 6"	1' - 4"	8	1 - 5

REMARKS:

1. SEE ARCHITECTURAL PLANS FOR LOUVER ELEVATIONS.
2. UNIT SHALL BE EXTRUDED ALUMINUM DRAINABLE STATIONARY TYPE.
3. PROVIDE BIRDSCREENS. SCREENS SHALL BE CONTAINED WITHIN A REMOVABLE FRAME.
4. UNIT SHALL BE AMCA LICENSED.
5. FINISH TO BE SELECTED BY ARCHITECTURAL. PROVIDE ARCHITECT WITH COLOR WHEEL PER MANUFACTURER.

GRILLES, REGISTERS AND DIFFUSERS SCHEDULE

	BASIS OF DESIGN											
TAG	MANUFACTURER	MODEL	SYSTEM	DESCRIPTION	MOUNTING	FACE SIZE	NECK SIZE	MATERIAL	BORDER TYPE	FINISH COLOR	DESIGN NC	REMARKS
A	TITUS	350FL	TRANSFER / EXHAUST	SIDEWALL GRILLE	SURFACE	6" X 6"	REFER TO PLANS	ALUMINUM	SURFACE	WHITE	25	1

REMARKS:

1. WHERE COLOR LISTED IN AIR TERMINAL SCHEDULE CONFLICTS WITH COLOR LISTED IN ARCHITECTURAL SHEETS, SPECIFICATION FROM ARCHITECT SHALL TAKE PRECEDENCE.

EXHAUST FAN SCHEDULE

	LOCATION			BASIS OF DESIGN			FAN DATA							ELECTRICAL DATA		
										MOTOR						
ID	NAME	NO.	SERVICE	MANUFACTURER	MODEL NO.	TYPE	AIRFLOW (CFM)	ESP (IN. WG.)	DRIVE TYPE	POWER (HP)	RPM	MAX SOUND (dBA)	UNIT WEIGHT (LBS)	VOLTS (V)	PH	REMARKS
EF-1	UTILITY CHASE	100	EXHAUST	GREENHECK	SQ-90-G	INLINE CENTRIFUGAL	300	0.3	DIRECT	0.04	1220	48	49	208	1	1 - 7

REMARKS:

1. PROVIDE MANUFACTURER'S STARTER.
2. FACTORY INSTALLED DISCONNECT.
3. PROVIDE NEMA PREMIUM EFFICIENCY MOTORS.
4. SPEED CONTROL SWITCH MOUNTED ON FAN FOR BALANCING PURPOSES.
5. RUNS CONTINUOUSLY BASED UPON OWNER SCHEDULE.
6. SUSPEND FAN FROM STRUCTURE WITH RUBBER-IN-SHEAR ISOLATORS.
7. PROVIDE GRAVITY BACKDRAFT DAMPER.

ROOF HOOD SCHEDULE

		BASIS OF DESIGN								DIMENSIONS				
											CURB			
ID	NAME	MANUFACTURER	MODEL NO.	TYPE	AIRFLOW (CFM)	THROAT VELOCITY (FPM)	THROAT AREA (SF)	MAX PD (IN. WG.)	DAMPER TYPE	THROAT DIAMETER	LENGTH	WIDTH	UNIT WEIGHT (LBS)	REMARKS
RH-1	ROOF	GREENHECK	GRSR-10	GRAVITY RELIEF VENTILATOR	300	526	1	0.033	BACKDRAFT	10"	19"	19"	8	

SANDY SPRINGS GEORGIA

GEORGIA REGISTERED No. PE044675 PROFESSIONAL ENGINEER BRENDEN T. FRAZIER 10-11-19 SEAL

MARK	DESCRIPTION	DATE
0	BID SET	10/11/19

DESIGNED BY: SG
DWN BY: SG
CKD BY: MWC
SUBMITTED BY:
FILE NAME:
SIZE: 22"X34"
PLOT SCALE:
PLOT DATE:
ISSUE DATE: 10/11/19
SOLICITATION NO.: SPD-XX-XXXX
CONTRACT NO.:
CONTRACT NUMBER
FILE NUNBER: XX-X-XXX

CITY OF SANDY SPRINGS:
SANDY SPRINGS CITY HALL
1 GALAMBOS WAY
SANDY SPRINGS, GA 30328

POND
3600 Piedmont Ave.
Atlanta, Georgia 30305, Suite 300
Phone (678) 336-7740
Fax (678) 336-7744
JOB NO. 1190708

HERITAGE PARK IMPROVEMENTS

MECHANICAL SCHEDULES & CONTROLS

SHEET IDENTIFICATION NUMBER
M-601

10/10/2019 3:56:20 PM C:\Users\frazieb\Documents\1190708_SS_Heritage_Park_MEP_FP_v19_BrendenF.rvt

Copyright © 2019 by Pond & Company. All rights reserved. No copying or duplication of these documents is allowed without the express written agreement of Pond & Company.

SHEET NAMING CONVENTION

P-001A

- 2 DIGIT DISCIPLINE DESIGNATOR (IF ONLY ONE LETTER IS USED, THE SECOND LETTER IS REPLACED WITH A DASH "-" AS A PLACEHOLDER)**
- 1 DIGIT SHEET TYPE DESIGNATOR
  - 0 - GENERAL
  - 1 - PLANS
  - 2 - ELEVATIONS
  - 3 - SECTIONS
  - 4 - ENLARGED PLANS
  - 5 - DETAILS
  - 6 - SCHEDULES AND DIAGRAMS
  - 7 - VARIES
  - 8 - VARIES
  - 9 - 3D VIEWS (ISO, PERSPECTIVES)
- 2 DIGIT SEQUENTIAL # (01-99) (FIRST DIGIT INDICATES PLAN TYPE. SECOND DIGIT INDICATES FLOOR)
- 1 DIGIT AREA DESIGNATOR (AREA DESIGNATOR ONLY USED WHEN PLANS ARE SUBDIVIDED INTO AREAS.)

NOTES:

1. ALL EXISTING EQUIPMENT IS SHOWN IN THIN LINEWORK. ALL DEMOLISHED EQUIPMENT IS SHOWN IN BOLD LINEWORK, DASHED, AND HATCHED. ALL NEW OR RELOCATED EQUIPMENT IS SHOWN IN BOLD LINEWORK. BELOW IS AN EXAMPLE OF EACH:

- EXISTING EQUIPMENT
- EQUIPMENT TO BE DEMOLISHED
- NEW OR RELOCATED EQUIPMENT

PLUMBING GENERAL NOTES

1. PLUMBING WORK SHALL BE IN ACCORDANCE WITH THE INTERNATIONAL BUILDING CODE, INTERNATIONAL PLUMBING CODE, AND INTERNATIONAL FUEL GAS CODE.
2. SLOPES AND INVERT ELEVATIONS SHALL BE ESTABLISHED BEFORE ANY PIPE IS INSTALLED IN ORDER TO MAINTAIN PROPER SLOPES. ANY DISCREPANCIES SHALL BE REPORTED TO [CONTRACTING OFFICER'S] [OWNER'S] REPRESENTATIVE. ALL PIPING SHALL BE LOCATED AND DETERMINED WHEN TO BE INSTALLED TO AVOID CONFLICT WITH OTHER TRADES.
3. PIPING SHALL BE CONCEALED UNLESS OTHERWISE NOTED.
4. KEEP ALL BURIED PIPING CLEAR OF FOOTINGS. COORDINATE WITH STRUCTURAL.
5. ALL WALL CLEANOUTS SHALL BE PROVIDED WITH WALL COVERS AND MOUNTED IN UNOBTRUSIVE LOCATIONS WHILE MAINTAINING ACCESSIBILITY. ALL FLOOR CLEANOUTS SHOWN SHALL BE SET FLUSH WITH FLOOR AREAS OR FINISHED GRADE.
6. COORDINATE LOCATION OF PIPING AND DRAINS WITH ALL MECHANICAL AND ELECTRICAL EQUIPMENT. NO PIPING SHALL BE INSTALLED ABOVE ELECTRICAL, COMMUNICATIONS, OR DATA EQUIPMENT OR PANELS. COMPLY WITH ARCHITECTURAL PLANS FOR EXACT LOCATION OF PLUMBING FIXTURES, COMPLIANCE TO ADA CLEARANCES, AND FINISHES.
7. PROVIDE REQUIRED WATER, WASTE, AND VENT PIPING, FITTINGS, AND INSULATION, AND MAKE FINAL CONNECTIONS TO EQUIPMENT. THESE PLANS ARE SCHEMATIC AND DIAGRAMMATIC ONLY. THEY DO NOT SHOW ALL REQUIRED BENDS, OFFSETS, VALVES, AND MISCELLANEOUS FITTINGS FOR A COMPLETE INSTALLATION. ALL PIPING, EQUIPMENT, AND CONNECTIONS SHALL BE INSTALLED IN ACCORDANCE WITH SPECIFICATIONS, LOCAL CODES AND ORDINANCES, AND MANUFACTURER'S INSTRUCTIONS.
8. WASTE PIPING SHALL BE INSTALLED TO PROVIDE A MINIMUM SLOPE OF 1%. WASTE PIPING 3" AND SMALLER SHALL BE INSTALLED TO PROVIDE A MINIMUM SLOPE OF 2%.
9. DO NOT SCALE DRAWINGS. REFER TO ARCHITECTURE DRAWINGS FOR EXACT DIMENSIONS, FIXTURE LOCATIONS, ROOM NAMES, AND NUMBERS.
10. PROVIDE EXTENSION OF EQUIPMENT DRAINS TO FLOOR DRAINS, FLOOR SINKS, AND OPEN SITE DRAINS.
11. WHERE POSSIBLE, INSTALL SHUT-OFF VALVES AND EQUIPMENT REQUIRING MAINTENANCE, CLEANING AND ADJUSTMENT ABOVE ACCESSIBLE CEILINGS OR IN SERVICE AREAS SUCH AS JANITOR'S CLOSETS. IN OTHER LOCATIONS, PROVIDE ACCESS PANELS IN INCONSPICUOUS LOCATIONS WITH FINISH TO MATCH ARCHITECTURAL.
12. ALL HOSE BIBBS, WALL HYDRANTS, AND VALVES WITH THREADED HOSE CONNECTIONS SHALL BE EQUIPPED WITH VACUUM BREAKER.
13. WHERE CONNECTING TO A UTILITY OR SERVICE, VERIFY LOCATION, SIZES, MATERIALS, FLUID BEING HANDLED, AND INVERTS OF ALL EXISTING UTILITIES AND CONFIRM THAT NEW PIPES BEING ROUTED TO EXISTING UTILITIES CAN BE INSTALLED CONFORMING TO CODE AND AS SHOWN. NOTIFY [CONTRACTING OFFICER] [GENERAL CONTRACTOR] [ARCHITECT] OF ANY CONFLICTS OR DISCREPANCIES PRIOR TO PURCHASING ANY MATERIALS OR PERFORMING ANY WORK OR EXTENSION OF CONNECTION, WITH THE EXCEPTION OF EXCAVATION OR OTHER WORK TO PROVIDE ACCESS TO THE CONCEALED UTILITY.
14. PROVIDE INSULATION, PIPE IDENTIFICATION, AND OTHER REQUIREMENTS AS LISTED IN SPECIFICATIONS.
15. ALL PIPING ABOVE GRADE SHALL BE SUPPORTED FROM THE BUILDING STRUCTURE AND SHALL NOT REST ON CEILING TILES OR BE SUPPORTED FROM CEILING TILES.
16. WATER PIPING ROUTED ABOVE CEILINGS AND IN EXTERIOR WALLS SHALL BE ROUTED ON HEATED SIDE (UNDERSIDE) OF CEILING INSULATION AND HEATED SIDE (INSIDE) OF WALL INSULATION.
17. TOPS OF ALL FLOOR DRAINS AND CLEANOUTS SHALL BE SET FLUSH WITH FINISHED FLOOR, UNLESS NOTED OTHERWISE.
18. LOCATE ALL SECTIONAL OR MAIN CONTROL VALVES WITHIN 1'-0" FROM ACCESS PANELS, CEILING TILES, OR OTHER POINT OF ACCESS.
19. PROVIDE WATER HAMMER ARRESTORS SIZED PER PLUMBING DRAINAGE INSTITUTE SPECIFICATIONS ON ALL DOMESTIC WATER LINES SERVING FLUSH VALVE FIXTURES, WASHING MACHINES SUPPLIES, PRV STATIONS, AND OTHER INSTALLATIONS WITH QUICK CLOSING VALVES.
20. PROVIDE A MANUFACTURED EXPANSION DEVICE OR FABRICATED EXPANSION LOOP ON ALL PIPING SYSTEMS CROSSING BUILDING EXPANSION JOINTS.
21. COORDINATE ELECTRICAL CHARACTERISTICS AND REQUIREMENTS OF ALL PLUMBING EQUIPMENT WITH THE ELECTRICAL DRAWINGS AND THE ELECTRICAL CONTRACTOR, AND FURNISH EQUIPMENT WIRED FOR THE VOLTAGES SHOWN THEREIN.
22. ALL PLUMBING EQUIPMENT AND SYSTEMS SHALL BE GUARANTEED FOR A MINIMUM PERIOD OF ONE YEAR AFTER OWNER'S FINAL ACCEPTANCE.
23. ALL PIPE PENETRATIONS OF FIRE AND/OR SMOKE-RATED ASSEMBLIES SHALL BE FIRE-STOPPED AS REQUIRED TO RESTORE ASSEMBLY TO ORIGINAL INTEGRITY. FIRE BARRIER PRODUCTS SHALL BE AS MANUFACTURED BY 3M COMPANY, CP25 CAULK, CS195 COMPOSITE PANEL, FS195 WRAP/STRIP, OR PSS 7900 SERIES SYSTEMS AS RECOMMENDED BY MANUFACTURER FOR PARTICULAR APPLICATION, OR EQUIVALENT SYSTEM AS APPROVED BY LOCAL CODE OFFICIALS.
24. ALL WATER CLOSET FLUSH VALVE LEVERS SHALL BE LOCATED ON THE APPROACH SIDE OF THE WATER CLOSET.
25. ALL GAS REGULATORS REQUIRING VENTS SHALL BE VENTED TO THE EXTERIOR PER THE INTERNATIONAL GAS CODE REQUIREMENTS. VENT TERMINALS SHALL BE A MINIMUM OF 10'-0" FROM ANY AIR INTAKE OR SOURCE OF IGNITION.
26. ALL VENTS THROUGH ROOF SHALL BE LOCATED A MINIMUM OF 10'-0" FROM ANY OUTSIDE AIR INTAKE.
27. ALL COLD WATER, HOT WATER, AND DRAIN PIPING AT HANDICAPPED FIXTURES SHALL BE INSULATED WITH HANDI-LAV GUARD MODELS 102 AND 105 (OR APPROVED EQUAL) INSULATION KITS.
28. NOT ALL PLUMBING ABBREVIATIONS SHOWN WILL BE USED FOR THIS PROJECT.

PLUMBING ABBREVIATIONS

A/C	ABOVE CEILING
ADA	AMERICANS WITH DISABILITIES ACT
AFF	ABOVE FINISHED FLOOR
AFG	ABOVE FINISHED GRADE
ARCH	ARCHITECTURE, ARCHITECTURAL
BFP	BACKFLOW PREVENTER
B/F	BELOW FLOOR
B/G	BELOW GRADE
BLDG	BUILDING
BV	BALL VALVE
CA	COMPRESSED AIR
CD	CONDENSATE DRAIN
CONT.	CONTINUATION
CO	CLEANOUT
CV	CHECK VALVE
CONTR	CONTRACTOR
CW	COLD WATER (POTABLE / DOMESTIC)
DEG.	DEGREES
DF	DRINKING FOUNTAIN
DHWR	DOMESTIC HOT WATER RETURN
DN	DOWN
DSN	DOWNSPOUT NOZZLE
DWGS	DRAWINGS
EWC	ELECTRIC WATER COOLER
EWH	ELECTRIC WATER HEATER
EMEW	EMERGENCY EYEWASH
EMSH	EMERGENCY SHOWER
ESEW	EMERGENCY SHOWER / EYEWASH
FCO	FLOOR CLEANOUT
FD	FLOOR DRAIN
GC	GENERAL CONTRACTOR
GPF	GALLONS PER FLUSH
GPH	GALLONS PER HOUR
GPM	GALLONS PER MINUTE
GV	GATE VALVE
GWH	GAS WATER HEATER
HB	HOSE BIBB
H/C	HANDICAP
HW	HOT WATER (POTABLE / DOMESTIC)
I.E.	INVERT ELEVATION
IBC	INTERNATIONAL BUILDING CODE
IFGC	INTERNATIONAL FUEL GAS CODE
IMB	ICE MAKER BOX
IPC	INTERNATIONAL PLUMBING CODE
IW	INDIRECT WASTE
KW	KILOWATT
L	LAUNDRY
LP	LIQUID PETROLEUM
LV	LAVATORY
MFG	MANUFACTURER
MS	MOP SINK
NFWH	NON-FREEZE WALL HYDRANT
NG	NATURAL GAS
NIC	NOT IN CONTRACT
ORD	OVERFLOW ROOF DRAIN
P, PLBG	PLUMBING
PDI	PLUMBING DRAINAGE INSTITUTE
PSI	POUNDS PER SQUARE INCH
RD	ROOF DRAIN
RL	RAIN LEADER
RPZ	REDUCED PRESSURE ZONE
SAN, S	SANITARY PIPING
SANS	SANITARY SEWER
SH	SHOWER
SK	SINK
SOV	SHUT-OFF VALVE
STR	STRAINER
SS	STAINLESS STEEL
TMV	THERMOSTATIC MIXING VALVE
T&P	TEMPERATURE AND PRESSURE RELIEF VALVE
TP	TRAP PRIMER
TYP	TYPICAL
UR	URINAL
U/G	UNDERGROUND
U/SAN	UNDERGROUND SANITARY
V	VENT PIPING
VTR	VENT THROUGH ROOF
W	WASTE PIPING
WB	CLOTHES WASHER OUTLET BOX
WC	WATER CLOSET
WCO	WALL CLEANOUT
WH	WATER HEATER
WHA	WATER HAMMER ARRESTOR
W/O	WITHOUT
W/	WITH
YCO	YARD CLEANOUT

PLUMBING LEGEND

- DIRECTION OF FLOW
- PIPE TURNED DOWN
- PIPE TURNED UP
- RISE OR DROP
- BRANCH BOTTOM CONNECTION
- BRANCH TOP CONNECTION
- TEE OUTLET UP
- TEE OUTLET DOWN
- CAP ON END OF PIPE
- SANITARY WASTE (NEW) - ABOVE FLOOR OR GRADE
- SANITARY WASTE (NEW) - BELOW FLOOR OR GRADE
- VENT PIPING (NEW)
- POTABLE / DOMESTIC COLD WATER PIPING (NEW)
- POTABLE / DOMESTIC HOT WATER SUPPLY PIPING (NEW)
- POTABLE / DOMESTIC HOT WATER RETURN PIPING (NEW)
- THERMOMETER
- TEMPERATURE & PRESSURE RELIEF VALVE
- FLOW MEASURING / BALANCING / SHUT-OFF VALVE
- BALL VALVE
- CHECK VALVE
- GATE VALVE
- STRAINER
- UNION

PLAN	ELEV	
		HOSE BIBB
		FLOOR DRAIN
	TP	TRAP PRIMER
FCO	FCO	FLOOR CLEANOUT
WCO	WCO	WALL CLEANOUT
		WATER HAMMER ARRESTOR

- S / # — SANITARY RISER DIAGRAM DESIGNATION / RISER DIAGRAM NUMBER
- W / # — DOMESTIC WATER RISER DIAGRAM DESIGNATION / RISER DIAGRAM NUMBER
- DEMOLISHED
- CONNECT TO EXISTING
- DISCONNECT FROM EXISTING

SANDY SPRINGS GEORGIA

GEORGIA REGISTERED PROFESSIONAL ENGINEER No. PE044675 BRENDEN T. FRAZIER 10-11-19

SEAL

MARK	DESCRIPTION	DATE
0	BID SET	10/11/19

CITY OF SANDY SPRINGS:
SANDY SPRINGS CITY HALL
1 GALAMBOS WAY
SANDY SPRINGS, GA 30328

POND
3500 Parkway Lane
Peachtree Corners, GA 30092, Suite 500
Phone (678) 336-7740
Fax (678) 336-7744
JOB NO. 1190708

DESIGNED BY: SG	ISSUE DATE: 10/11/19
DWN BY: SG / CKD BY: WWC	SOLICITATION NO.: SOL-XX-X-XXXX
SUBMITTED BY:	CONTRACT NO.: CONTRACT NUMBER
FILE NAME:	FILE NUNBER: XX-X-XXXX
SIZE: 22"x34" / PLOT SCALE:	PLOT DATE:

HERITAGE PARK IMPROVEMENTS

PLUMBING GENERAL NOTES, ABBREVIATIONS, AND LEGENDS

SHEET IDENTIFICATION NUMBER

P-001

10/10/2019 3:56:21 PM C:\Users\frazierb\Documents\1190708_SS_Heritage_Park_MEP_FP_v19_BrendenF.rvt

Copyright © 2019 by Pond & Company. All rights reserved. No copying or duplication of these documents is allowed without the express written agreement of Pond & Company.

1 | 2 | 3 | 4 | 5

GENERAL PLUMBING

GENERAL

A. SUMMARY OF WORK

1. THE CONTRACTOR IS RESPONSIBLE FOR ALL WORK, MATERIALS, AND LABOR TO SATISFY A COMPLETE WORKING SYSTEM WHETHER SPECIFIED OR IMPLIED.
2. ALL WORK IS TO BE PERFORMED IN STRICK ACCORDANCE WITH THE INTERNATIONAL PLUMBING CODE, 2012 EDITION, WITH GEORGIA AMENDMENTS.
3. THE CONTRACTOR SHALL, BEFORE SUBMITTING ANY PROPOSAL, EXAMINE THE PROPOSED SITE AND SHALL DETERMINE FOR THEMSELF THE CONDITIONS THAT MAY AFFECT THE WORK. NO ALLOWANCE SHALL BE MADE IF THE CONTRACTOR FAILS TO MAKE SUCH EXAMINATIONS.
4. ALL EQUIPMENT AND MATERIALS SHALL BE AS SPECIFIED OR "APPROVED EQUAL" BY ENGINEER OR ARCHITECT.
5. ALL WORK SHALL BE PERFORMED BY PLUMBERS SKILLED IN THE PARTICULAR CLASS OF WORK AND ALL EQUIPMENT SHALL BE INSTALLED IN STRICT ACCORDANCE WITH THE MANUFACTURER'S RECOMMENDATIONS. THE WORK SHALL BE COORDINATED WITH OTHER TRADES AND RESPONSIBILITIES ESTABLISHED SO THAT THE WORK SHALL BE COMPLETED WITHOUT DELAYS OR INTERFERENCE WITH SCHEDULES.
6. EACH FIXTURE, EQUIPMENT DRAIN OR FLOOR DRAIN SHALL BE SEPARATELY TRAPPED, UNLESS OTHERWISE INDICATED OR SPECIFIED.
7. INSTALL UNIONS ON ONE SIDE OF EACH VALVE OR CONNECTIONS TO EQUIPMENT.

B. PERMITS

1. THE CONTRACTOR SHALL SECURE ALL PERMITS OR APPLICATIONS AND PAY ANY AND ALL FEES PERTAINING TO THE CONTRACT.

C. SHOP DRAWINGS/AS-BUILTS

1. CONTRACTOR SHALL SUBMIT SHOP DRAWINGS AND EQUIPMENT CUT SHEETS TO THE ENGINEER FOR APPROVAL PRIOR TO STARTING ANY WORK.

PRODUCTS

A. GENERAL

1. ALL MATERIALS SHALL BE NEW AND FREE FROM ALL DEFECT. THESE SPECIFICATIONS SHALL LIST ALL OF THE ACCEPTABLE MATERIALS FOR A GIVEN SERVICE, ONE OF WHICH SHALL BE USED UNLESS OTHERWISE SPECIFICALLY NOTED.
2. THE QUALITY AND WEIGHT OF MATERIALS FURNISHED AND INSTALLED SHALL COMPLY WITH THE REQUIREMENTS OF THE APPROPRIATE STANDARDS OF THE AMERICAN SOCIETY FOR TESTING AND MATERIALS (ASTM), LIFE SAFETY CODE, AND THE LOCAL PLUMBING CODE.
3. ALL PLUMBING EQUIPMENT AND MATERIALS SHALL BE INSTALLED IN ACCORDANCE WITH MANUFACTURER'S WRITTEN INSTRUCTIONS AND RECOMMENDATIONS. ALL FIXTURES AND EQUIPMENT SHALL BE INSTALLED LEVEL, PLUMB, AND RUN PARALLEL OR PERPENDICULAR TO THE BUIDLING WALLS, UNLESS INDICATED OTHERWISE.
4. ALL PIPING SHALL BE RUN STRAIGHT, PLUMB, AND PROPERLY GRADED IN ACCORDANCE WITH THE LOCAL PLUMBING CODE. CUT PIPE SHALL BE SQUARELY CUT AND PROPERLY REAMED TO REMOVE ALL CUTTINGS AND BURRS BEFORE MAKING UP THE JOINTS. FITTINGS AND NIPPLES SHALL BE OF THE SAME MATERIALS AS THE PIPE.
5. PROVIDE A BALL-COCK STOP ON WATER SUPPLY IN BRANCH PIPE OT EACH PLUMBING FIXTURE WHETHER SHOWN ON THE DRAWINGS OR NOT.
6. WHERE PIPE SECTION SIZE IS NOT SHOWN, USE THE SIZE SHOWN ON THE LAST SECTION PIPE SIZE SHOWN UPSTREAM OF THIS SECTION.
7. COORDINATE WITH MECHANICAL/HVAC DRAWINGS TO ENSURE THE SANITARY VENTS THROUGH ROOF MAINTAIN A MINIMUM 10'-0" HORIZONTALLY FROM ANY FRESH AIR INTAKE INTO THE BUILDING.
8. THE LOCATIONS OF UNDERGROUND UTILITIES ARE SHOWN IN APPROXIMATE WAY ONLY. THE CONTRACTOR IS RESPONSIBLE FOR DETERMINING THE EXACT LOCATION OF ALL UTILITES TO START OF WORK.
9. EXACT LOCATIONS AND ROUGH-IN REQUIREMENTS FOR ALL FIXTURES AND EQUIPMENT SHALL BE DETERMINED FROM ARCHITECTURAL DRAWINGS AND MANUFACTURER'S SHOP DRAWINGS. PARTICULAR ATTENTION SHALL BE DIRECTED TO FIXTURES OR EQUIPMENT FURNISHED BY OTHER TRADES.

B. DOMESTIC WATER SUPPLY PIPING

1. ABOVE GROUND: ALL PIPING SHALL BE COPPER TUBING ASTM B 88 TYPE L, HARD DRAWN.
   A. FITTINGS: ANSI/ASME B, 16.23 CAST BRASS OR ANSI ASME B 16.22 WROUGHT COPPER.
   B. JOINTS: ANSI/ASTM B 32 SOLDER GRADE 95TA OR AWS A 5.8BCuP 2-BRAZING ALLOY.
2. VALVES: SHUT-OFF VALVES SHALL BE FULL PORT, THREADED OR SOLDER-END TYPE, RATED AT NOT LESS THAN 200 LB. NON-SHOCKING COLD WATER WORKING PRESSURE. VALVES SHALL BE BALL TYPE "MILWAUKEE 100 BUTTERBALL" OR EQUAL. PROVIDE VALVES IN EACH BRANCH LINE WHETHER SHOWN ON DRAWINGS OR NOT.

C. SANITARY AND VENT PIPING

1. ABOVE GRADE: ALL PIPING SHALL BE SERVICE WEIGHT CAST IRON WITH NO-HUB CAST IRON FITTINGS.
2. BELOW GRADE:
3. DRAINAGE PIPING SHALL BE RUN AS STRAIGHT AS POSSIBLE AND SHALL HAVE LONG RADIUS FITTINGS.
4. DRAINAGE PIPING 2" SIZE AND SMALLER SHALL RUN AT A UNIFORM GRADE OF AT LEAST 1/4" PER FOOT, AND PIPING LARGER THAN 2" SHALL BE RUN AT A GRADE OF NO LESS THAN 1/8" PER FOOT.
5. ALL VENT PIPING SHALL BE SLOPED TO DRAIN BACK TO SANITARY.

D. PENETRATIONS

1. ALL STUB-INS AND/OR SLAB OR WALL PENETRATIONS TO BE PER INTERNATIONAL PLUMBING CODE, 2012 ED. WITH GEORGIA AMENDMENTS.

E. PIPE SUPPORTS

1. ABOVE GRADE: ALL PIPE SHALL BE SUPPORTED FROM THE BUILDING STRUCTURE IN A NEAT AND WORKMANLIKE MANNER. THE USE OF WIRE AND PREFORMED METAL TO SUPPORT PIPES WILL NOT BE PERMITTED. SPACING OF PIPE SUPPORTS SHALL BE AS SPECIFIED IN CHAPTER 8 OF THE INTERNATIONAL PLUMBING CODE.

F. PIPE INSULATION

1. INSULATE (AS ALLOWED BY CODE) ALL LISTED SERVICE PIPING AS FOLLOWS.
   A. DOMESTIC COLD/HOT WATER, HOT WATER RETURN, STORM WATER PIPING: PROVIDE 1" PREFORMED FIBERGLASS, ASJ/SS-11, FLAME 25 SMOKE DEVELOPED 50, ASTM C-547.

EXECUTION

A. GENERAL

1. DO NOT SCALE THIS DRAWING FOR EXACT DIMENSIONS. VERIFY FIGURES, CONDITIONS, AND DIMENSIONS AT JOB SITE.
2. THE PLUMBING PLANS ARE INTENDED TO BE DIAGRAMMATIC AND ARE BASED ON ONE MANUFACTURER'S EQUIPMENT. THEY ARE NOT INTENDED TO SHOW EVERY ITEM IN ITS EXACT LOCATION, THE EXACT DIMENSIONS, OR ALL THE DETAILS OF THE EQUIPMENT. THE CONTRACTOR SHALL VERIFY THE ACTUAL DIMENSIONS OF THE EQUIPMENT PROPOSED TO ENSURE THAT THE EQUIPMENT WILL FIT IN THE AVAILABLE SPACE.
3. BEFORE BEING PLACED IN POSITION, PIPE AND FITTINGS SHALL BE CLEANED CAREFULLY. ALL PIPE SHALL BE MAINTAINED IN A CLEAN CONDITION.
4. SEWER AND WATER PIPING SHALL BE PLACED IN SEPARATE TRENCHES.
5. WATER PIPING SHALL BE BURIED AT A DEPTH OF SIX INCHES BELOW THE FROST LINE OR A MINIMUM OF 12 INCHES, WHICHEVER IS GREATER.
6. WATER HAMMER ARRESTORS SHALL BE PROVIDED INSTEAD OF SITE-FABRICATED AIR CHAMBERS, AND SHALL BE SIZED AS REQUIRED AND INSTALLED IN ACCORDANCE WITH MANUFACTURER'S RECOMMENDATIONS.

B. SANITARY SYSTEMS

1. SANITARY SYSTEMS SHALL BE PROVIDED WHERE APPLICABLE, WITH Y FITTINGS AND 1/8 OR 1/16 BENDS OR COMBINATION Y AND 1/8 BENDS. ALL FIXTURES NOT SPECIFIED TO BE PROVIDED WITH TRAPS AS INTEGRAL PARTS OF THEIR OUTFITS AND ALL DRAINS SHALL HAVE SEPARATE TRAPS WITH CLEANOUTS. WASTE LINES SHALL NOT BE LESS THAN 2 INCHES IN DIAMETER.
2. ALL FIXTURES SHALL BE INDIVIDUALLY VENTED, OR SHALL BE CONNECTED TO A VENTED SOIL OR WASTE LINE. UNLESS INDICATED OTHERWISE, SANITARY PIPING SHALL FORM CIRCUIT OR LOOP VENTS WITH NO DEAD ENDS OR INVERTED SIPHONS. CIRCUIT OR LOOP VENT LINES SHALL BE CONNECTED AT A HEIGHT OF NOT LESS THAN 12 INCHES ABOVE THE FIXTURES SERVED. HORIZONTAL VENTS SHALL SLOPE DOWN TO WASTE OR SOIL BRANCH OR STACK.
3. HORIZONTAL SOIL AND WASTE PIPING, GENERALLY, SHALL BE GRADED 1/8 INCH PER FOOT.
4. VERTICAL STACKS SHALL BE EXTEDNED FULL SIZE AS VENTS TO NOT LESS THAN 12 INCHES ABOVE THE ROOF AND SHALL BE PLACED IN POSITION BEFORE THE ROOFING IS APPLIED. WHERE PRACTICAL, TWO OR MORE VENT LINES MAY BE CONNECTED AND EXTENDED AS ONE PIPE THROUGH THE ROOF.
5. VENT FLASHING AT THE ROOF SHALL EXTEND NOT LESS THAN 8 INCHES FROM THE VENT PIPE IN ALL DIRECTIONS. LEAD FLASHING SHALL BE TURNED DOWN INTO THE PIPES OR HUBS.
6. CLEANOUTS SHALL BE INSTALLED AT THE FOOT OF EACH SOIL OR WASTE LINE, AT CHANGES IN HORIZONTAL DIRECTION IN THE LINE RESULTING IN AN ANGLE GREATER THAN 45 DEG., AND WHERE INDICATED.
7. THE DISTANCE BETWEEN CLEANOUTS IN HORIZONTAL RUNS WITHIN THE BUILDING SHALL NOT EXCEED 100 FEET.
8. CLEANOUTS IN FLOORS SHALL BE EXTENDED FULL SIZE TO THE FLOOR LEVEL WITH OUTLETS FITTED WITH TRAP SCREWS WITH COUNTERSUNK CAPS.
9. CLEANOUTS SHALL BE PIPE SIZE EXCEPT NO CLEANOUT SHALL EXCEED 6 INCHES IN DIAMETER.

C. WATER SYSTEMS

1. WATER SYSTEMS SHALL BE INSTALLED WITH A FALL TOWARD THE SHUT-OFF VALVE OR THE LOWEST FIXTURE. BRANCHES FROM COLD WATER LINES SHALL BE PROVIDED TO FIXTURES AND OUTLETS AS INDICATED.

D. PIPE SLEEVES

1. PIPE SLEEVES SHALL BE PROVIDED WHERE PIPES PASS THROUGH MASONRY OR CONCRETE WALLS, FLOORS, ROOFS, AND PARTITIONS. SLEEVES SHALL BE PLACED DURING CONSTRUCTION OF THE BUILDING. THE USE OF JACK HAMMERS IS STRICTLY PROHIBITED. SLEEVES IN OUTSIDE WALLS BELOW AND ABOVE GRADE, OR IN FLOOR SLABS, SHALL BE ZINC-COATED SHEET STEEL. SPACE BETWEEN PIPE, TUBING, OR INSULATION AND THE SLEEVE SHALL NOT BE LESS THAN 1/4 INCH. SLEEVES SHALL BE HELD SECURELY IN PROPER POSITION AND LOCATION BEFORE AND DURING CONSTRUCTION. ALL SLEEVES SHALL BE OF SUFFICIENT LENGTH TO PASS THROUGH ENTIRE THICKNESS OF WALLS, PARTITIONS, OR SLABS. SLEEVES IN FLOOR SLABS SHALL EXTEND 2 INCHES ABOVE THE FINISHED FLOOR. SPACE BETWEEN THE PIPE AND THE SLEEVE SHALL BE FIRMLY PACKED WITH OAKUM AND CAULKED ON BOTH ENDS OF THE SLEEVE WITH INSULATING CEMENT. SLEEVES LOCATED IN WATERPROOFED CONSTRUCTION SHALL BE PROVIDED WITH FLANCH AND CLAMPING RING. SLEEVES ARE NOT REQUIRED IN FLOOR SLABS LOCATED ON GRADE EXCEPT THAT COPPER PIPE SHALL NOT COME INTO CONCRETE.

E. TESTING

1. PLUMBING SYSTEMS SHALL BE FLOW AND PRESSURE TESTED IN ACCORDANCE WITH STANDARD PRACTICE AND THE INTERNATIONAL PLUMBING CODE, 2012 EDITION, WITH GEORGIA AMENDMENTS.

F. GUARANTEE

1. MATERIALS, EQUIPMENT, AND INSTALLATION SHALL BE GUARANTEED FOR A PERIOD OF ONE (1) YEAR FROM DATE OF ACCEPTANCE. DEFECTS WHICH APPEAR DURING THAT PERIOD SHALL BE CORRECTED AT THIS CONTRACTOR'S EXPENSE.
2. FOR THE SAME PERIOD, THE PLUMBING CONTRACTOR SHALL BE RESPONSIBLE FOR ANY DAMAGE TO PREMISE CAUSED BY DEFECTS IN WORKMANSHIP OR IN THE WORK OR EQUIPMENT FURNISHED AND/OR INSTALLED BY THEM.

G. O&M MANUALS

1. FURNISH COMPLETE COPY OF INSTRUCTIONS EXPLAINING OPERATION AND MAINTENANCE AND REPLACEMENT PARTS LISTS FOR THE FAUCET TRIM, FLUSH VALVES, AND FIXTURES.

SANDY SPRINGS
GEORGIA

GEORGIA REGISTERED No. PE044675 PROFESSIONAL ENGINEER BRENDEN T. FRAZIER
10-11-19
SEAL

MARK	DESCRIPTION	DATE
0	BID SET	10/11/19

DESIGNED BY: SG		ISSUE DATE: 10/11/19
DWN BY: SG	CKD BY: WWC	SOLICITATION NO.: SOL-XX-X-XXXX
SUBMITTED BY:		CONTRACT NO.: CONTRACT NUMBER
FILE NAME:		FILE NUNBER: XX-X-XXXX
SIZE: 22"x34"	PLOT SCALE:	PLOT DATE:

CITY OF SANDY SPRINGS:
SANDY SPRINGS CITY HALL
1 GALAMBOS WAY
SANDY SPRINGS, GA 30328

POND
3500 Parkway Lane
Peachtree Corners, GA
30092, Suite 500
Phone (678) 336-7740
Fax (678) 336-7744
JOB NO. 1190708

HERITAGE PARK IMPROVEMENTS

PLUMBING SPECIFICATIONS

SHEET IDENTIFICATION NUMBER
P-002

Copyright © 2019 by Pond & Company. All rights reserved. No copying or duplication of these documents is allowed without the express written agreement of Pond & Company.

10/10/2019 3:56:21 PM C:\Users\frazierb\Documents\1190708_SS_Heritage_Park_MEP_FP_v19_BrendenF.rvt

SHEET NOTES:

1. REFER TO P-001 FOR PLUMBING GENERAL NOTES, ABBREVIATIONS, AND LEGENDS.

KEYNOTES:

KEY #	KEYNOTE DESCRIPTION
1	CONNECT 4" SANITARY TO EXTERIOR UTILITY. REFER TO CIVIL UTILITIES DRAWING FOR CONTINUATION.
2	3" VTR.

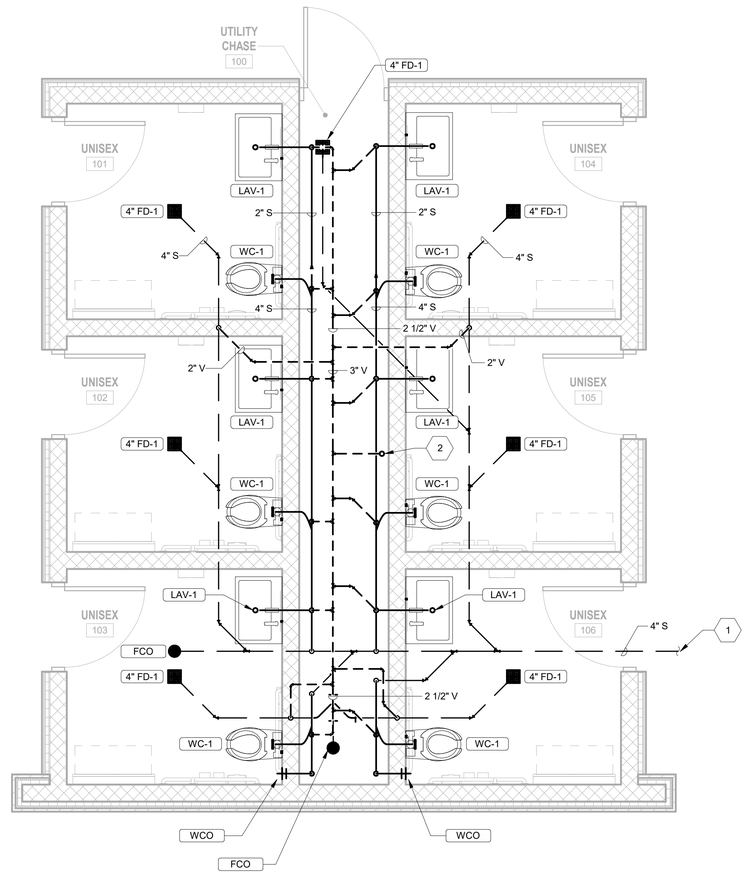

A2 PLUMBING SANITARY WASTE & VENT PLAN

SCALE: 3/8" = 1'-0"

2 0 2 4 6

SCALE: 3/8" = 1'-0"

NORTH

SANDY SPRINGS GEORGIA

GEORGIA REGISTERED No. PE044675 PROFESSIONAL ENGINEER BRENDEN T. FRAZIER 10-11-19

SEAL

MARK	DESCRIPTION	DATE
0	BID SET	10/11/19

ISSUE DATE: 10/11/19
SOLICITATION NO.: SOLXXXXXXX
CONTRACT NO.: CONTRACT NUMBER
FILE NUNBER: XX-X-XXXX
PLOT DATE:

DESIGNED BY: SG
DWN BY: SS
CKD BY: WWC
SUBMITTED BY:
FILE NAME:
SIZE: 22"X34"
PLOT SCALE:

CITY OF SANDY SPRINGS:
SANDY SPRINGS CITY HALL
1 GALAMBOS WAY
SANDY SPRINGS, GA 30328

POND
3920 Pinetree Lane
Doraville, Georgia 30360, Suite 200
Phone (678) 336-7740
Fax (678) 336-7744

JOB NO. 1190708

HERITAGE PARK IMPROVEMENTS

PLUMBING SANITARY WASTE & VENT PLAN

SHEET IDENTIFICATION NUMBER

P-101

10/10/2019 9:56:22 PM C:\Users\frazierb\Documents\1190708_SS_Heritage_Park_MEP_FP_v19_BrendenF.rvt

Copyright © 2019 by Pond & Company. All rights reserved. No copying or duplication of these documents is allowed without the express written agreement of Pond & Company.

SHEET NOTES:

1. REFER TO P-001 FOR PLUMBING GENERAL NOTES, ABBREVIATIONS, AND LEGENDS.

KEYNOTES:

KEY #	KEYNOTE DESCRIPTION
1	CONNECT 2" DOMESTIC COLD WATER TO UTILITY. REFER TO CIVIL UTILITIES DRAWING FOR CONTINUATION.
2	INSTALL BACKFLOW PREVENTION DEVICE IN VERTICAL RISER. REFER TO DETAIL C4/P-501.
3	INSTALL SHUT-OFF VALVE IN VERTICAL.

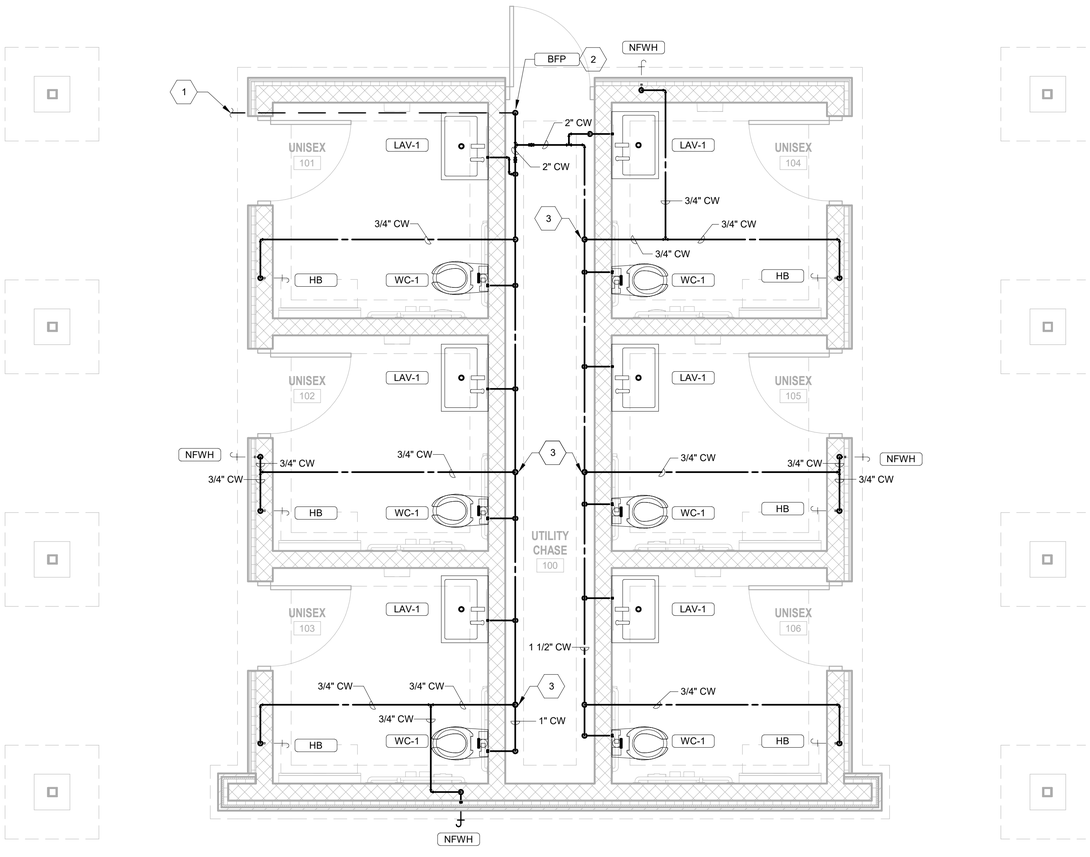

A2 PLUMBING DOMESTIC PIPING PLAN

SCALE: 3/8" = 1'-0"

2 0 2 4 6

SCALE: 3/8" = 1'-0"

NORTH

SANDY SPRINGS GEORGIA

GEORGIA REGISTERED No. PE044675 PROFESSIONAL ENGINEER BRENDEN T. FRAZIER 10-11-19

SEAL

MARK	DESCRIPTION	DATE
0	BID SET	10/11/19

ISSUE DATE: 10/11/19
SOLICITATION NO.: SOLXXXXXXX
CONTRACT NO.: CONTRACT NUMBER
FILE NUNBER: XX-X-XXXX
PLOT DATE:

DESIGNED BY: SG
DWN BY: SS
CKD BY: WWC
SUBMITTED BY:
FILE NAME:
SIZE: 22"X34"
PLOT SCALE:

CITY OF SANDY SPRINGS:
SANDY SPRINGS CITY HALL
1 GALAMBOS WAY
SANDY SPRINGS, GA 30328

POND
3600 Trickum Lane
Stone Mountain, GA 30083, Suite 300
Phone: (678) 336-7940
Fax: (678) 336-7744

JOB NO. 1190708

HERITAGE PARK IMPROVEMENTS

PLUMBING DOMESTIC PIPING PLAN

SHEET IDENTIFICATION NUMBER

P-102

10/10/2019 3:56:23 PM C:\Users\frazierb\Documents\1190708_SS_Heritage_Park_MEP_FP_v19_BrendenF.rvt

Copyright © 2019 by Pond & Company. All rights reserved. No copying or duplication of these documents is allowed without the express written agreement of Pond & Company.

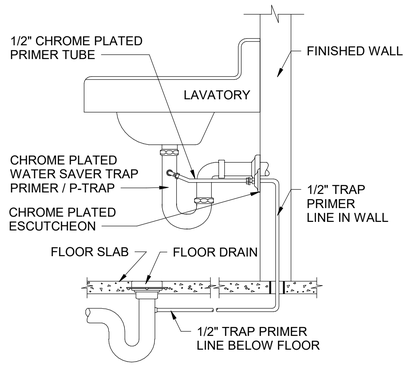

C1 WATER SAVER TRAP PRIMER DETAIL

SCALE: N.T.S.

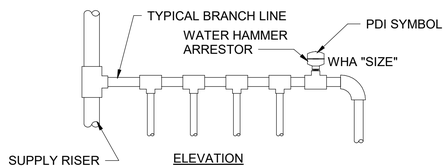

WATER HAMMER ARRESTOR SCHEDULE						
PDI SYMBOL	A	B	C	D	E	F
FIXTURE UNIT RATING	1-11	12-32	33-60	61-113	114-154	155-330

NOTES:
1. INSTALL WATER HAMMER ARRESTORS AT THE END OF BRANCH LINE BETWEEN THE LAST TWO FIXTURES SERVED.
2. ONE WATER HAMMER ARRESTOR PER 20' LINE, AND ANOTHER FOR BRANCHES OVER 20' IN LENGTH.
3. THE SUM OF FIXTURE UNIT RATING OF UNITS OVER 20' IN LENGTH SHALL BE EQUAL TO OR GREATER THAN THE DEMAND OF THE BRANCHES.

B1 WATER HAMMPER ARRESTOR DETAIL

SCALE: N.T.S.

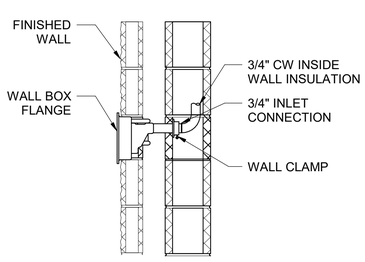

A1 WALL HYDRANT (NFWH) DETAIL

SCALE: N.T.S.

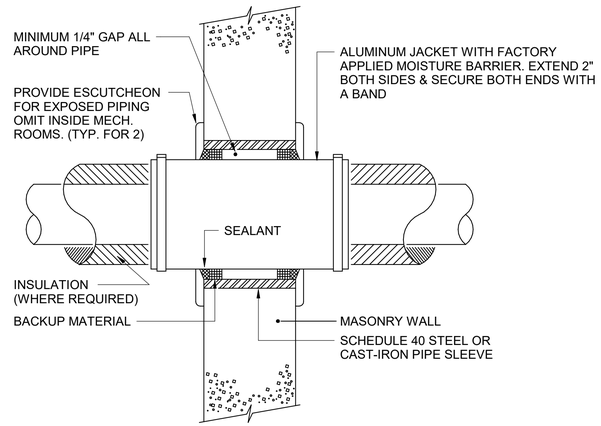

NOTES:
1. FOR GYP. BOARD WALLS PROVIDE MIN. 16 GAUGE GALV. STEEL SLEEVE W/ LOCK-TYPE LONGITUDINAL SEAM. CUT FLUSH WITH WALL.
2. OMIT ALUMINUM JACKET IF PIPING IS UNINSULATED

C3 WALL PIPE PENETRATION DETAIL

SCALE: N.T.S.

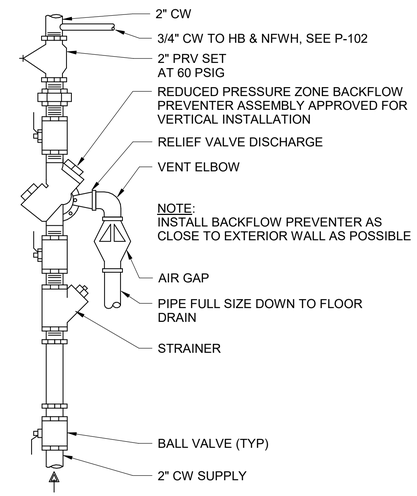

C4 VERTICAL DOMESTIC WATER SERVICE DETAIL

SCALE: N.T.S.

PLUMBING FIXTURE SCHEDULE									
							BASIS OF DESIGN		
ID	FIXTURE TYPE	COLD WATER PIPE SIZE	HOT WATER PIPE SIZE	WASTE PIPE SIZE	VENT PIPE SIZE	FLOW RESTRICTION	MANUFACTURER	MODEL	DESCRIPTION
FD-1	FLOOR DRAIN	---	---	4"	2"	---	ZURN	Z4155, ZN4155	CAST IRON FLOOR DRAIN WITH 6"X6" SQUARE NICKEL BRONZE STRAINER, MEMBRANE CLAMP, AND TRAP PRIMER CONNECTION. HEAVY DUTY CAST IRON COVER (Z) IN MAINTENANCE SPACES AND NICKEL BRONZE COVER (ZN) IN PUBLIC SPACES.
HB	HOSE BIBB	3/4"	---	---	---	---	ZURN	Z-1335	ANTI-SIPHON RECESSED WALL HYDRANT WITH TAMPER RESISTANT BRASS WALL BOX, LOCKING COVER, SCREW DRIVER STOP AND VACUUM BREAKER.
LAV-1	LAVATORY - WALL HUNG - ADA	1/2"	---	2"	1-1/2"	0.5 GPM	KOHLER	K-2031-L	ADA WHITE VITREOUS CHINA, WALL MOUNT, SINGLE CENTERSET FAUCET HOLE, LEFT-HAND SOAP DISPENSER HOLE, SLOAN MODEL SF-2350 BATTERY POWERED DECK MOUNTED FAUCET AND GRID DRAIN. ZURN #1231 SUPPORT.
NFWH	EXTERIOR WALL HYDRANT	3/4"	---	---	---	---	ZURN	Z1320-C	FREEZE PROOF HYDRANT WITH RECESSED WALL BOX, LOCKING COVER, AND VACUUM BREAKER.
WC-1	WATER CLOSET - WALL HUNG - ADA	1"	---	4"	2"	1.28 GPF	KOHLER	K-4323	ADA, VITREOUS CHINA, WHITE, ELONGATED BOWL, SLOAN TRF 8156-1.28 CONCEALED BATTERY POWERED FLUSHOMETER, KOHLER K-4731-SA OPEN FRONT SEAT. ZURN MODEL Z-1204N ADJUSTABLE CARRIER, ADA MOUNTING HEIGHT.

PLUMBING SPECIALTIES SCHEDULE							
	LOCATION		BASIS OF DESIGN				
ID	NAME	NO.	MANUFACTURER	MODEL	DESCRIPTION	MATERIAL	REMARKS
BFP	UTILITY CHASE	100	ZURN	975 XL	RP REDUCED PRESSURE PRINCIPLE ASSEMBLY	BRONZE	1 - 2

REMARKS:

1. LEAD FREE.
2. INSTALL IN VERTICAL RISER. REFER TO DETAIL C4/P-501.

SANDY SPRINGS GEORGIA

GEORGIA REGISTERED No. PE044675 PROFESSIONAL ENGINEER BRENDEN T. FRAZIER 10-11-19 SEAL

MARK	DESCRIPTION	DATE
0	BID SET	10/11/19

DESIGNED BY: SG
DWN BY: DG
CKD BY: WWC
SUBMITTED BY:
FILE NAME:
SIZE: 22"X34"
PLOT SCALE:
ISSUE DATE: 10/11/19
SOLICITATION NO.: 19-101-XX-XXX
CONTRACT NO.: XX-X-XXXX
CONTRACT NUMBER
FILE NUMBER: XX-X-XXXX
PLOT DATE:

CITY OF SANDY SPRINGS:
SANDY SPRINGS CITY HALL
1 GALAMBOS WAY
SANDY SPRINGS, GA 30328

POND
3640 Parkway Lane
Norcross, Georgia 30092, Suite 300
Phone (678) 336-7740
Fax (678) 336-7744
JOB NO. 1190708

HERITAGE PARK IMPROVEMENTS

PLUMBING DETAILS & SCHEDULES

SHEET IDENTIFICATION NUMBER
P-501

10/10/2019 3:56:24 PM C:\Users\frazierb\Documents\1190708_SS_Heritage_Park_MEP_FP_v19_BrendenF.rvt

Copyright © 2019 by Pond & Company. All rights reserved. No copying or duplication of these documents is allowed without the express written agreement of Pond & Company.

SHEET NOTES:

1. REFER TO P-001 FOR PLUMBING GENERAL NOTES, ABBREVIATIONS, AND LEGENDS.

KEYNOTES:

KEY #	KEYNOTE DESCRIPTION
1	CONNECT 2" DOMESTIC COLD WATER TO UTILITY. REFER TO CIVIL UTILITIES DRAWING FOR CONTINUATION.
2	INSTALL BACKFLOW PREVENTION DEVICE IN VERTICAL RISER. REFER TO DETAIL C4/P-501.
3	INSTALL SHUT-OFF VALVE IN VERTICAL.
4	CONNECT 4" SANITARY TO EXTERIOR UTILITY. REFER TO CIVIL UTILITIES DRAWING FOR CONTINUATION.
5	3" VTR.

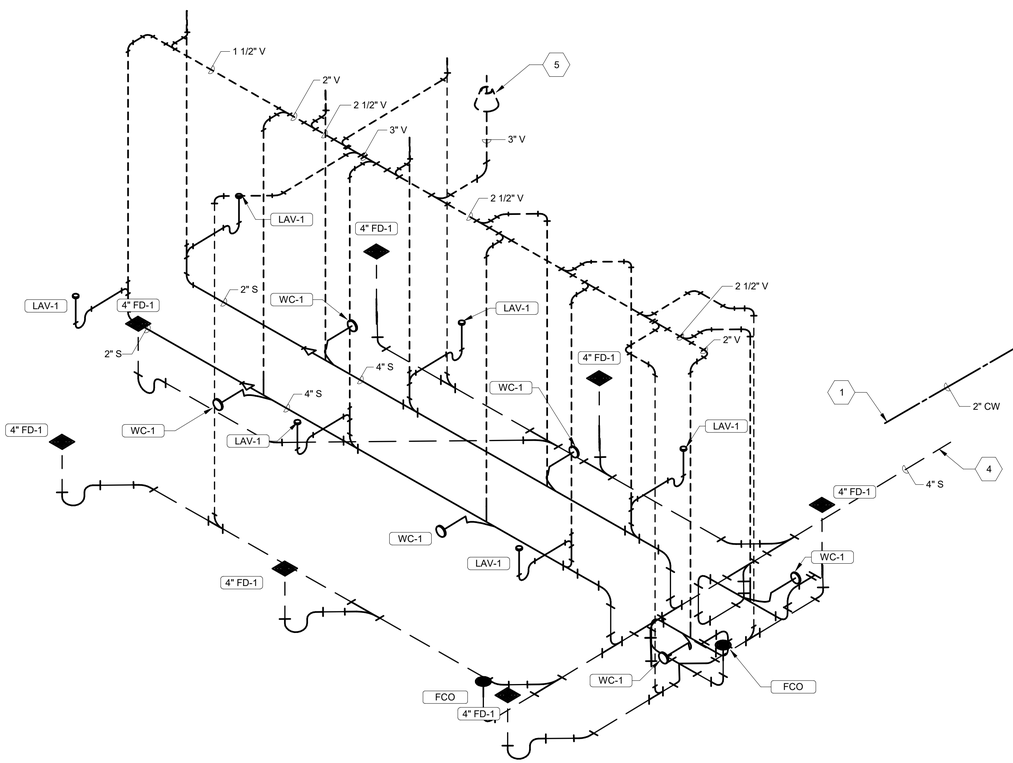

A1 WASTE AND VENT RISER DIAGRAM
SCALE: N.T.S.

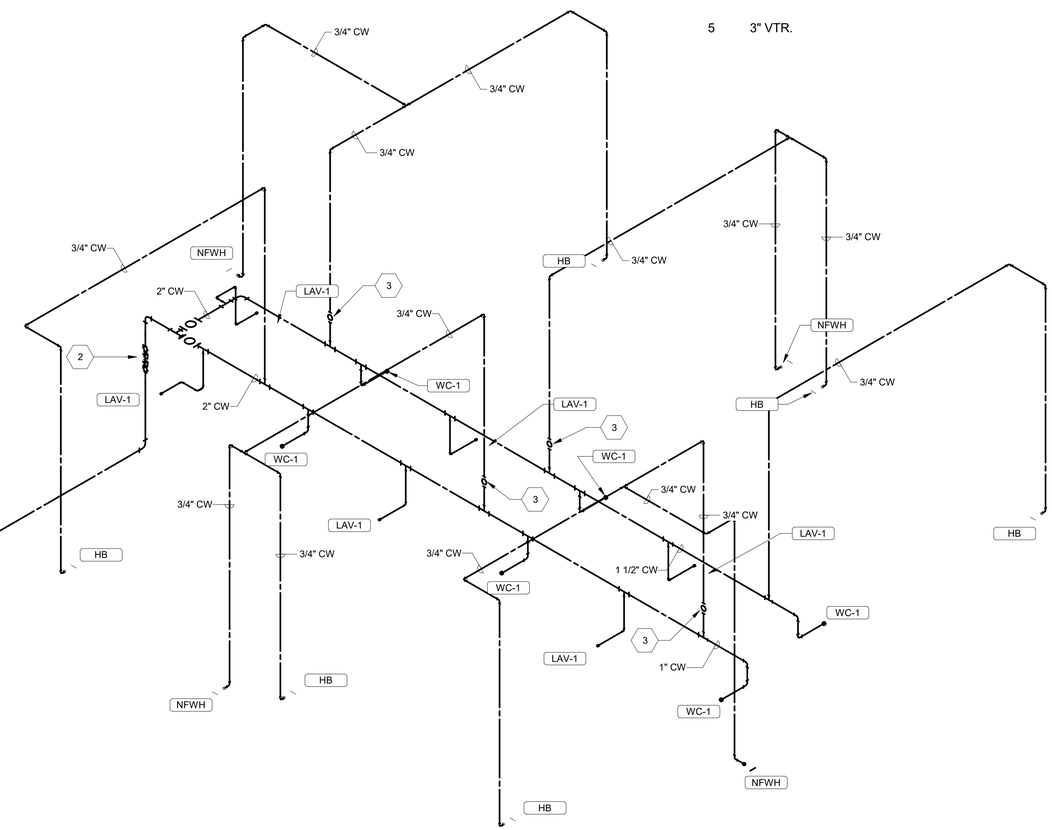

A4 DOMESTIC WATER RISER DIAGRAM
SCALE: N.T.S.

SANDY SPRINGS
GEORGIA

GEORGIA REGISTERED No. PE044675 PROFESSIONAL ENGINEER BRENDEN T. FRAZIER 10-11-19 SEAL

MARK	DESCRIPTION	DATE
0	BID SET	10/11/19

DESIGNED BY: SG
DWN BY: SG
CKD BY: WWC
SUBMITTED BY:
FILE NAME:
SIZE: 22"X34"
PLOT SCALE:
ISSUE DATE: 10/11/19
SOLICITATION NO.: SOL-XX-X-XXXX
CONTRACT NO.: CONTRACT NUMBER
FILE NUNBER: XX-X-XXXX
PLOT DATE:

CITY OF SANDY SPRINGS:
SANDY SPRINGS CITY HALL
1 GALAMBOS WAY
SANDY SPRINGS, GA 30328

POND
3500 Parkway Lane
Peachtree Corners, GA 30092, Suite 500
Phone (678) 336-7740
Fax (678) 336-7744
JOB NO. 1190708

HERITAGE PARK IMPROVEMENTS

PLUMBING RISER DIAGRAMS

SHEET IDENTIFICATION NUMBER
P-901

10/10/2019 3:56:24 PM C:\Users\frazierb\Documents\1190708_SS_Heritage_Park_MEP_FP_v19_BrendenF.rvt

Copyright © 2019 by Pond & Company. All rights reserved. No copying or duplication of these documents is allowed without the express written agreement of Pond & Company.

LEGEND

LIGHTING SYMBOLS NOTE: FIXTURE TYPE/ID INDICATORS SHOWN ON SYMBOL LEGEND ARE FOR ILLUSTRATION PURPOSES ONLY. MULTIPLE FIXTURE TYPES MAY SHARE A COMMON SYMBOL.

U	CIELING-MOUNTED LIGHT FIXTURE; SCRIPT INDICATES FIXTURE TYPE/ID. SEE LIGHTING FIXTURE SCHEDULE.
IN	INGRADE LUMINAIRE; SCRIPT INDICATES FIXTURE TYPE/ID. SEE LIGHTING FIXTURE SCHEDULE.
S	LIGHT FIXTURE RECESSED IN WALL OR STEP. SCRIPT INDICATES FIXTURE TYPE/ID. SEE LIGHTING FIXTURE SCHEDULE.
WX	LED LIGHTING FIXTURE MOUNTED ON WALL SURFACE. SCRIPT INDICATES FIXTURE TYPE/ID. SEE LIGHT FIXTURE SCHEDULE.
D	RECESSED MOUNTED LUMINAIRE, SCRIPT INDICATES FIXTURE TYPE/ID. SEE LIGHTING FIXTURE SCHEDULE.
X X	CEILING/WALL MOUNTED EXIT SIGN, SCRIPT INDICATES FIXTURE TYPE/ID. SEE LIGHTING FIXTURE SCHEDULE.
	RACEWAY EXPOSED TO VIEW: UNLESS INDICATED OTHERWISE, 2#12 & 1#12G – 3/4"C
	CONCEALED RACEWAY IN WALL OR ABOVE FINISHED CEILING: UNLESS INDICATED OTHERWISE, 2#12 & 1#12G – 3/4"C
	UNDERGROUND RACEWAY BELOW GRADE OR CONCRETE SLAB: UNLESS INDICATED OTHERWISE, 2#12 & 1#12G – 3/4"C
HH-1 H	UNDERGROUND ELECTRICAL HANDHOLE ENCLOSURE – QUAZITE PG SERIES OR EQUAL HH-X INDICATES HANDHOLE ID.
	3/4"X 10' COPPER CLAD GROUND ROD
S	WALL-MOUNTED SPST SWITCH 48" AFF.
S_O	WALL-MOUNTED MANUAL-ON OCCUPANCY SENSOR SWITCH 48" AFF.
S_D	WALL-MOUNTED SLIDING DIMMER SWITCH 48" AFF.
OS	CEILING OR PENDANT-MOUNTED OCCUPANCY SWITCH. MOUNT AT ELEVATION EQUAL TO ELEVATION OF CONNECTED FIXTURES.
WP	TAMPER-PROOF GFCI-TYPE DUPLEX RECEPTACLE IN EXTRA-DUTY WHILE-IN-USE LOCKABLE WEATHERPROOF ENCLOSURE; PASS AND SEYMOUR WIUCED10SG OR EQUAL. MOUNT 18" AFF UIO.
EWC	GFCI-TYPE DUPLEX RECEPTACLE, NEMA 5-20R. CONCEAL BEHIND WATER COOLER ENCLOSURE. MOUNT AT 25" AFF.
	DUPLEX RECEPTACLE, NEMA 5-20R. MOUNT 18" AFF UIO.
J 60/40/3/3R	DISCONNECT SWITCH, (SWITCH AMPS/FUSE SIZE/POLES/NEMA ENCLOSURE); NF = NON-FUSED.
J J H	CEILING OR WALL-MOUNTED JUNCTION BOX
J	ELECTRICAL JUNCTION BOX (EJB)

ABBREVIATIONS

AC	ALTERNATING CURRENT
AFF	ABOVE FINISHED FLOOR
AFG	ABOVE FINISHED GRADE
AIC	AMPS INTERRUPTING CAPACITY
ANSI	AMERICAN NATIONAL STANDARDS INSTITUTE
ASTM	AMERICAN SOCIETY FOR TESTING AND MATERIALS
AWG	AMERICAN WIRE GAUGE
AMPS	AMPS
C	CELSIUS, CONDUIT
CCT	CIRCUIT, CORRELATED COLOR TEMPERATURE
DC	DIRECT CURRENT
DEG	DEGREES
DIA	DIAMETER
EA	EACH
EUH	ELECTRIC UNIT HEATER
EF	EXHAUST FAN
F	FAHRENHEIT
FT	FEET
G	GROUND, EQUIPMENT GROUNDING CONDUCTOR
GFCI	GROUND FAULT INTERRUPTER TYPE
IN	INCH OR INCHES
KVA	KILOVOLT-AMPS
LED	LIGHT-EMITTING DIODE
MIL	$\frac{1}{1000}$TH OF AN INCH
MOD	MOTOR-OPERATED DAMPER
NIC	NOT IN CONTRACT
PV	PHOTOVOLTAIC
PVC	POLYVINYL CHLORIDE
RGS	RIGID GALVANIZED STEEL
SP	SERVICE POINT
SPST	SINGLE-POLE SINGLE-THROW
STA	STATION
UL	UNDERWRITERS LABORATORIES
SCCR	SHORT CIRCUIT CURRENT RATING
SPD	SURGE PROTECTION DEVICE
V	VOLTS
WP	WEATHERPROOF
XFMR	TRANSFORMER

NOTE : NOT ALL SYMBOLS OR ABBREVIATIONS SHOWN WILL BE USED.

ELECTRICAL GENERAL NOTES

1. ALL WORK SHALL CONFORM TO THE REQUIREMENTS OF:
   A. NFPA 70-2017 (NATIONAL ELECTRICAL CODE)
   B. ANSI C2-2017 (NATIONAL ELECTRICAL SAFETY CODE)
   C. APPLICABLE LOCAL CODES AND FEDERAL AND STATE LAWS.

2. EXISTING ELECTRICAL MATERIALS AND EQUIPMENT SHALL REMAIN UNLESS INDICATED OTHERWISE IN THESE PLANS. IF EXISTING ELECTRICAL MATERIALS OR EQUIPMENT UNDERGO UNAUTHORIZED ALTERATION, THEN THE ALTERED COMPONENTS SHALL BE RESTORED OR REPLACED IN KIND. ANY SUCH WORK SHALL BE COMPLETED AT THE SOLE EXPENSE OF THE CONTRACTOR.

3. ALL CONDUCTORS SHALL BE COPPER.

4. ALL MATERIALS SHALL BE NEW, UL OR CSA LISTED TO UL STANDARDS, AND MEET THE REQUIREMENTS OF THE 2017 NATIONAL ELECTRICAL CODE.

5. THE CONTRACTOR SHALL PROVIDE ALL ACCESSORIES NECESSARY TO ENSURE PROPER INSTALLATION AND OPERATION OF SYSTEMS INCLUDED IN THESE PLANS.

6. UNLESS INDICATED OTHERWISE, CONDUCTORS SHALL BE 2#12 AWG AND 1#12G IN 3/4" CONDUIT. CONDUCTOR INSULATION SHALL BE TYPE THHN/THWN 90/75°C.

7. UNDERGROUND CONDUIT SHALL BE SCHEDULE 40 PVC EXCEPT WHERE INSTALLED WITHIN PLANTING BEDS. UNDERGROUND CONDUIT INSTALLED WITHIN PLANTING BEDS SHALL BE RIGID GALVANIZED STEEL.

8. ALL EXPOSED CONDUIT SHALL BE RIGID GALVANIZED STEEL.

9. THE CONTRACTOR SHALL VERIFY THE LOCATION OF ALL UNDERGROUND UTILITIES PRIOR TO ANY DIGGING.

10. THE ENTIRE LUMINAIRE ASSEMBLY INCLUDING MATERIAL, FINISH, WORKMANSHIP, POWER SUPPLY, AND LUMEN MAINTENANCE SHALL HAVE A MINIMUM OF FIVE (5) YEAR WARRANTY FROM DATE OF INSTALLATION. ON-SITE REPLACEMENT INCLUDES TRANSPORTATION, REMOVAL, AND INSTALLATION OF EQUIPMENT. FINISH WARRANTY SHALL INCLUDE DETERIORATION SUCH AS BLISTERING, CRACKING, PEELING, CHALKING OR FADING.

11. PROVIDE ASTRONOMICAL TIME CLOCK AND LIGHTING RELAY PANEL FOR CONTROL OF ALL NEW SITE AND BUILDING EXTERIOR LIGHTING.

12. SURGE PROTECTION DEVICES SHALL BE UL 1449 FOURTH EDITION LISTED WITH MINIMUM SURGE CURRENT RATING OF 130,000A PER PHASE, BE EQUIPPED WITH STATUS LIGHTS IN NEMA 1 ENCLOSURE, AND PROVIDE PROTECTION IN ALL CIRCUIT MODES.

13. SITE AND BUILDING EXTERIOR RECEPTACLE OUTLETS SHALL BE TAMPER-PROOF GFCI TYPE.

14. PROVIDE TAMPER-PROOF SCREWS FOR ALL OUTDOOR LIGHT FIXTURE HOUSING AND POWER DISTRIBUTION EQUIPMENT (INCLUDING RECEPTACLE AND LIGHTING CONTROL ENCLOSURES) LOCATED BELOW 10'-0". COORDINATE PIN TYPE (TORX, ALLEN, ETC.) WITH OWNER PRIOR TO CONSTRUCTION.

15. CONTRACTOR SHALL RELOCATE OR REPLACE ANY EXISTING LIGHTS, CONDUITS AND CABLES WITHIN NEW RESTROOM BUILDING CONSTRUCTION AREA.

16. CONTRACTOR SHALL REPLACE ANY BROKEN COVERS OF GFCI/WP RECEPTACLES LOCATED IN SEAT WALL OPPOSITE TO BAND STAND.

17. CONTRACTOR SHALL INSTALL NEW 60A, 3 PHASE CIRCUIT BREAKER INSIDE EXISTING PANELBOARD 'A'. CONTRACTOR TO VERIFY PANELBOARD CAPACITY BEFORE ADDING ANY ADDITIONAL LOAD TO EXISTING PANELBOARD 'A'.

18. ALL WORK SHALL COMPLY WITH APPLICABLE STATE, FEDERAL AND LOCAL CODES, SPECIFICATIONS AND REQUIREMENTS. ALL NECESSARY LICENSES AND PERMITS ALONG WITH ANY ASSOCIATED FEES SHALL BE OBTAINED BY THE CONTRACTOR AT THEIR EXPENSE. IF DIFFERING CONDITIONS EXIST BETWEEN THE DRAWINGS, SPECIFICATIONS AND/OR OTHER APPLICABLE REGULATIONS AND GUIDELINES, NOTIFY THE OWNER'S PROJECT MANAGER BEFORE PROCEEDING.

19. THIS SHEET IS PART OF A MULTI-SHEET SET OF CONSTRUCTION PLANS WITH SPECIFICATIONS WITHIN PROJECT MANUAL, AND SHALL BE READ WITH THE FULL SET TO BEST ENSURE PROPER INTERPRETATION.

20. ALL CONDUIT AND ELECTRICAL JUNCTION BOX PLACEMENT ON THE LAYOUT DRAWINGS ARE DIAGRAMMATIC. CONTRACTOR SHALL FIELD ADJUST ELECTRICAL EQUIPMENT. JUNCTION BOXES SHALL NOT BE INSTALLED IN SIDEWALK IF POSSIBLE.

SANDY SPRINGS GEORGIA

GEORGIA REGISTERED No. PE027611 PROFESSIONAL ENGINEER JOSEPH M. SITT 10/11/19

SEAL

MARK	DESCRIPTION	DATE	APPR.
0	BID SET	2019.10.11	

DESIGNED BY: PIS | DATE: OCTOBER 11, 2019
DWN BY: PIS | CKD BY: JMS | SOLICITATION NO.: -
SUBMITTED BY: | CONTRACT NO.: -
FILE NUMBER: -
FILE NAME: E3101.dwg | PLOT DATE: 10/10/2019
SIZE: 22" x 34" | PLOT SCALE: 1:1

CITY OF SANDY SPRINGS
1 GALAMBOS WAY
SANDY SPRINGS, GA 30328

POND
3500 Parkway Lane
Peachtree Corners, GA
30092 Suite 550
Phone 678.336.7740
Fax 678.336.7744
POND PROJECT No. 1190708

HERITAGE PARK IMPROVEMENTS

GENERAL ELECTRICAL NOTES

SHEET IDENTIFICATION NUMBER
E-001

FILE PATH: \\ACP3SERVER\RESOURCES\PROJECTS\FY19\1190708\04.CAD_BIM\04.02.CAD\ES101.DWG PLOTTED BY: SHAH, PINKI

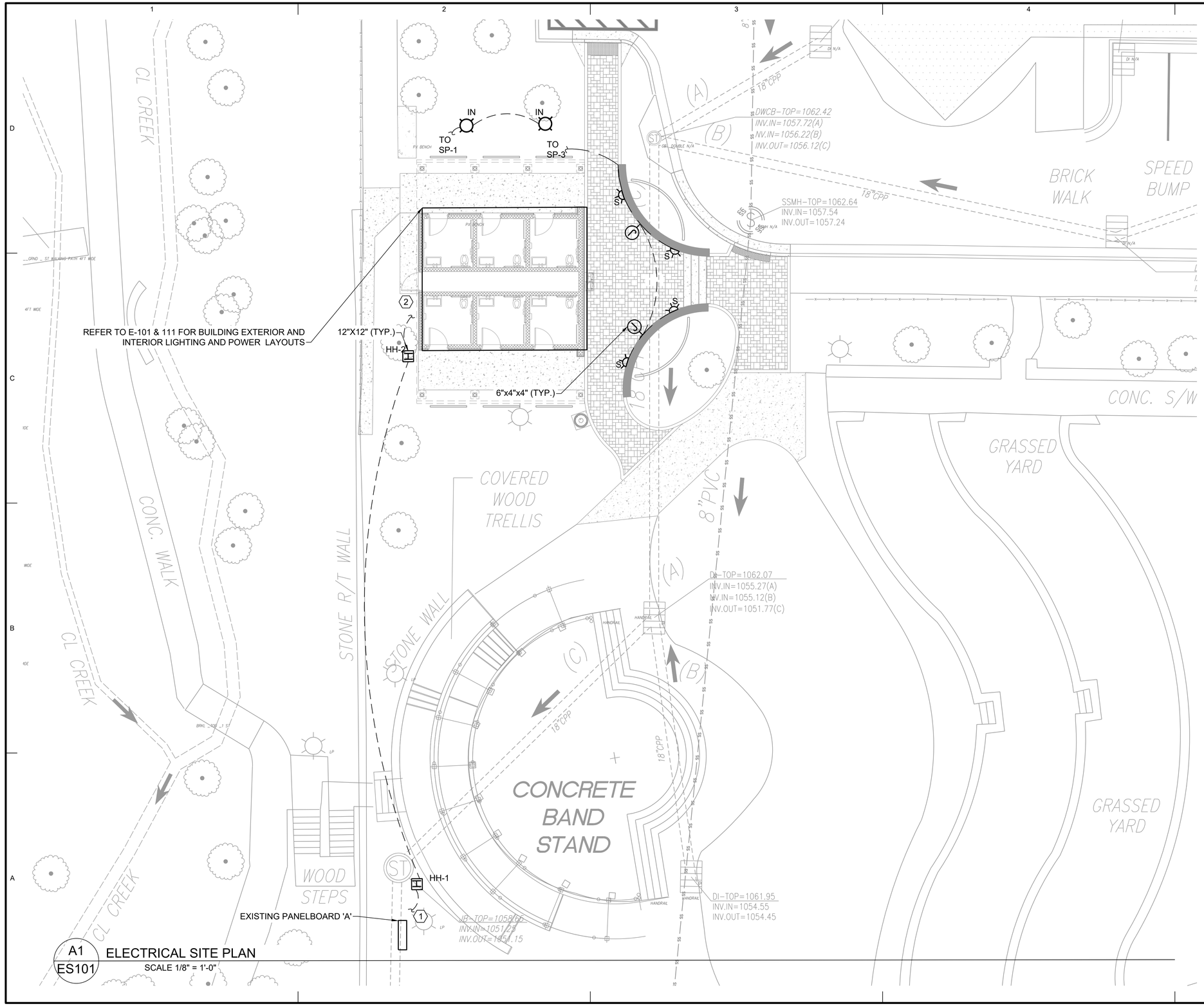

GENERAL SHEET NOTES

1. SEE E-001 FOR ELECTRICAL GENERAL NOTES, ABBREVIATIONS, & SYMBOLS.
2. SEE E-601 FOR POWER RISER DIAGRAM.
3. SEE E-602 FOR LIGHTING FIXTURE SCHEDULE.
4. PANELBOARD 'SP' LOCATED IN UTILITY CHASE INSIDE RESTROOM BUILDING. REFER TO E-601 FOR POWER RISER DIAGRAM. REFER TO E-101B FOR SUB PANELBOARD 'SP' LOCATION.
5. REFER TO DETAIL-A4/E-501 FOR WALL MOUNTED JUNCTION BOX DETAIL.
6. REFER TO DETAIL-A2/E501 FOR WALL MOUNTED STEP LIGHT DETAIL.
7. ALL EXPOSED CONDUITS SHALL BE RIGID GALVANIZED STEEL.
8. ALL UNDERGROUND CONDUIT INSTALLED WITHIN PLANTING BEDS SHALL BE RIGID GALVANIZED STEEL.
9. PROVIDE ASTRONOMICAL TIME CLOCK AND LIGHTING CONTROLLER FOR ALL SITE AND BUILDING EXTERIOR LIGHTING.

KEYED NOTES

1. PROVIDE UNDERGROUND FEEDER TO EXISTING PANELBOARD 'A' LOCATED BEHIND BANDSTAND, REFER TO E-601.
2. PROVIDE UNDERGROUND FEEDER TO NEW PANEL 'SP' LOCATED INSIDE RESTROOM BUILDING. REFER TO E-601.

SANDY SPRINGS
GEORGIA

GEORGIA REGISTERED PROFESSIONAL ENGINEER No. PE037674 JOSEPH M. STITT 10/11/17
SEAL

MARK	DESCRIPTION	DATE	APPR.
0	BID SET	2019.10.11	

DESIGNED BY: PS
DWN BY: PS
CKD BY: JMS
SUBMITTED BY:
DATE: OCTOBER 11, 2019
SOLICITATION NO.: -
CONTRACT NO.: -
FILE NUMBER: -
FILE NAME: ES101.dwg
SIZE: 22" x 34"
PLOT SCALE: 1:1
PLOT DATE: 10/10/2019

CITY OF SANDY SPRINGS
1 GALAMBOS WAY
SANDY SPRINGS, GA 30328

POND
3500 Parkway Lane
Peachtree Corners, GA
30092, SUITE 500
Phone 678.336.7740
Fax 678.336.7744
POND PROJECT No. 1190708

HERITAGE PARK IMPROVEMENTS

ELECTRICAL SITE PLAN

SHEET IDENTIFICATION NUMBER
ES101

FILE PATH: \\ACP3SERVER\RESOURCES\PROJECTS\FY19\1190708\04.CAD_BIM\04.02.CAD\ES101.DWG PLOTTED BY: SHAH, PINKI

SHEET NOTES:

1. REFER TO E-001 FOR ELECTRICAL GENERAL NOTES, ABBREVIATIONS & LEGEND.
2. REFER TO E-602 FOR LIGHTING FIXTURE SCHEDULE.
3. REFER TO ES101 FOR ADDITIONAL INFORMATION REGARDING SITE ELECTRICAL DISTRIBUTION.
4. REFER TO E-601 AND E-602 POWER RISER DIAGRAM AND PANEL BOARD SCHEDULE.
5. PROVIDE ASTRONOMICAL TIME CLOCK AND LIGHTING RELAYS FOR CONTROL OF ALL NEW SITE AND BUILDING EXTERIOR LIGHTING.

KEYNOTES:

1. WALL MOUNTED TYPE 'WX' LIGHTS AT 9'-0" AFG.
2. SUSPEND TYPE 'U' LIGHTS AT 9'-0" AFG.
3. WALL MOUNTED TYPE 'WX' LIGHT AT 7'-0" AFG.

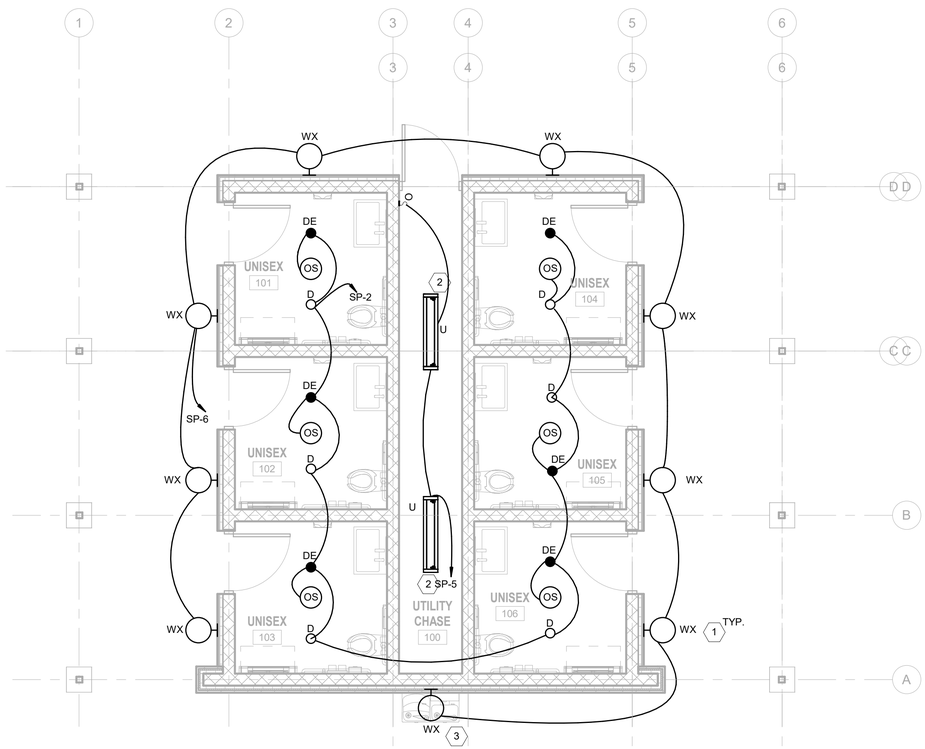

A1 LIGHTING PLAN - RESTROOM BUILDING

SCALE: 1/4" = 1'-0"

4 0 4 8

SCALE: 1/4" = 1'-0"

NORTH

SANDY SPRINGS GEORGIA

GEORGIA REGISTERED No. PE037674 PROFESSIONAL ENGINEER JOSEPH M. STITT 10/11/19

SEAL

MARK	DESCRIPTION	DATE
0	BID SET	2019.10.11

DESIGNED BY: PIS
DWN BY: PIS
CKD BY: JMS
SUBMITTED BY:
FILE NAME:
SIZE: 22"X34"
PLOT SCALE:
ISSUE DATE: 10/11/19
SOLICITATION NO.: SOL-XX-X-XXXX
CONTRACT NO.: CONTRACT NUMBER
FILE NUMBER: XX-X-XXXX
PLOT DATE:

CITY OF SANDY SPRINGS:
SANDY SPRINGS CITY HALL
1 GALAMBOS WAY
SANDY SPRINGS, GA 30328

POND
3500 Parkway Lane
Peachtree Corners, GA 30092, Suite 500
Phone (678) 336-7740
Fax (678) 336-7744
JOB NO. 1190708

HERITAGE PARK IMPROVEMENTS

LIGHTING PLAN - RESTROOM BUILDING

SHEET IDENTIFICATION NUMBER

E-101

10/10/2019 4:26:14 PM C:\Users\ShahP\Documents\1190708_SS_Heritage_Park_MEP_FP_v19_ShahPinki.rvt

Copyright © 2019 by Pond & Company. All rights reserved. No copying or duplication of these documents is allowed without the express written agreement of Pond & Company.

MECHANICAL EQUIPMENT SCHEDULE

UNIT	VOLTAGE	POLE	KVA	FLA	HP	STARTER	DISCONNECT	FEEDER SIZE	PANEL	CIRCUIT	LOCATION
EF-1	208 V	2	0.40 kVA		1/25	BY DIVISION 23	30/NF/2/1	2#12 & 1#12G -3/4"C	SP	13,15	UTILITY CHASE 100
EUH-1	208 V	2	1.50 kVA	7.2			INTEGRAL	2#12 & 1#12G -3/4"C	SP	20,22	UNISEX 101
EUH-2	208 V	2	1.50 kVA	7.2			INTEGRAL	2#12 & 1#12G -3/4"C	SP	21,23	UNISEX 102
EUH-3	208 V	2	1.50 kVA	7.2			INTEGRAL	2#12 & 1#12G -3/4"C	SP	24,26	UNISEX 103
EUH-4	208 V	2	1.50 kVA	7.2			INTEGRAL	2#12 & 1#12G -3/4"C	SP	14,16	UNISEX 104
EUH-5	208 V	2	1.50 kVA	7.2			INTEGRAL	2#12 & 1#12G -3/4"C	SP	10,12	UNISEX 105
EUH-6	208 V	2	1.50 kVA	7.2			INTEGRAL	2#12 & 1#12G -3/4"C	SP	17,19	UNISEX 106
EUH-7	208 V	2	3.02 kVA	14.5			INTEGRAL	2#10 & 1#10G -3/4"C	SP	9,11	UTILITY CHASE 100

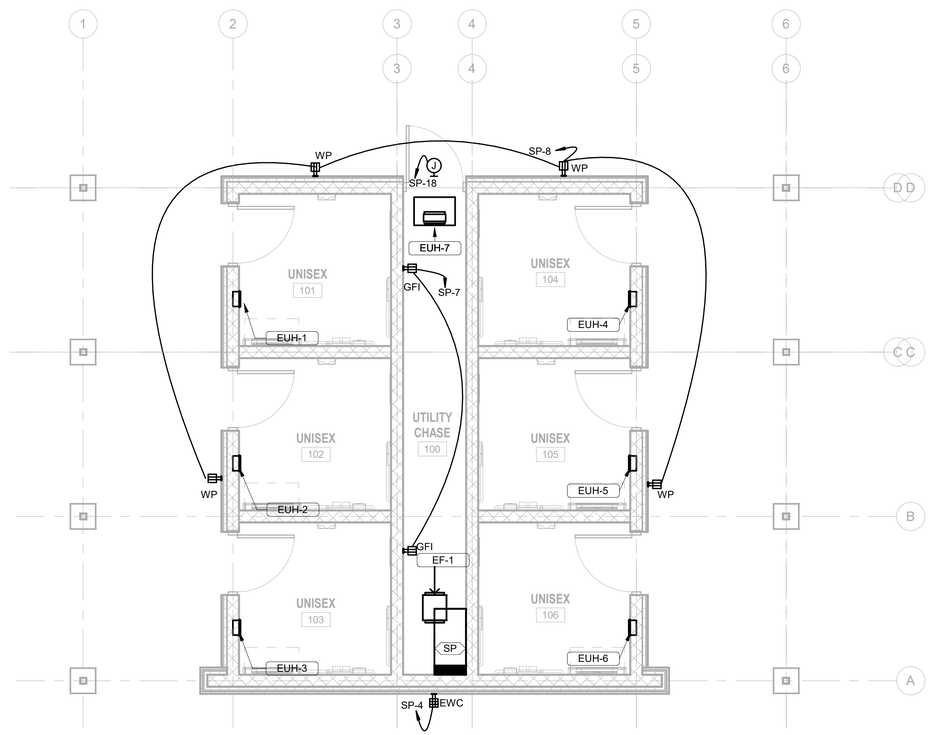

A1 POWER PLAN - RESTROOM BUILDING

SCALE: 1/4" = 1'-0"

SHEET NOTES:

1. REFER TO E-001 FOR ELECTRICAL GENERAL NOTES, ABBREVIATIONS & LEGEND.
2. REFER TO ES101, POWER RISER DIAGRAM ON E-601, PANEL BOARD SCHEDULE & CONDUIT SCHEDULE ON E-602 FOR ADDITIONAL INFORMATION REGARDING SITE ELECTRICAL DISTRIBUTION.
3. PROVIDE LOCAL DISCONNECTS FOR MECHANICAL EQUIPMENT AS INDICATED IN MECHANICAL EQUIPMENT CONNECTION SCHEDULE (THIS SHEET).

4 0 4 8

SCALE: 1/4" = 1'-0"

NORTH

SANDY SPRINGS
GEORGIA

GEORGIA REGISTERED No. PE027674 PROFESSIONAL ENGINEER JOSEPH M. STITT 10/11/17

SEAL

MARK	DESCRIPTION	DATE
0	BID SET	2019.10.11

DESIGNED BY: PIS
DWN BY: PIS
CKD BY: JMS
SUBMITTED BY:
FILE NAME:
SIZE: 22"X34"
PLOT SCALE:
ISSUE DATE: DATE
SOLICITATION NO.: SOL-XX-X-XXXX
CONTRACT NO.: CONTRACT NUMBER
FILE NUMBER: XX-X-XXXX
PLOT DATE:

CITY OF SANDY SPRINGS:
SANDY SPRINGS CITY HALL
1 GALAMBOS WAY
SANDY SPRINGS, GA 30328

POND
3500 Parkway Lane
Peachtree Corners, GA
30092, Suite 500
Phone (678) 336-7740
Fax (678) 336-7744

JOB NO. 1190708

HERITAGE PARK IMPROVEMENTS

POWER PLAN - RESTROOM BUILDING

SHEET IDENTIFICATION NUMBER
E-111

9/24/2019 10:27:49 AM C:\Users\ShahP\Documents\1190708_SS_Heritage_Park_MEP_FP_v19_ShahPinki.rvt

Copyright © 2019 by Pond & Company. All rights reserved. No copying or duplication of these documents is allowed without the express written agreement of Pond & Company.

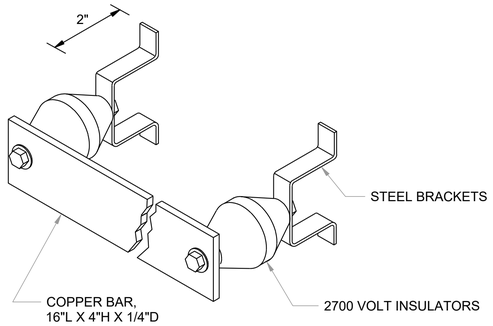

C1 E-501 GROUND BAR DETAIL
NOT TO SCALE

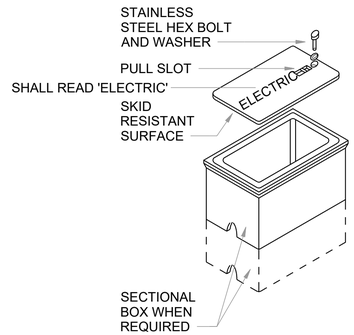

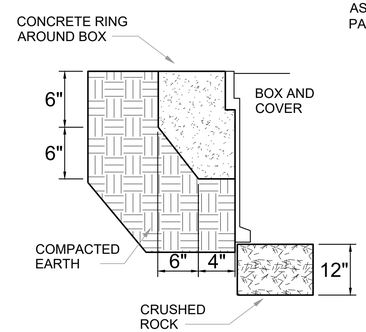

IN EARTH

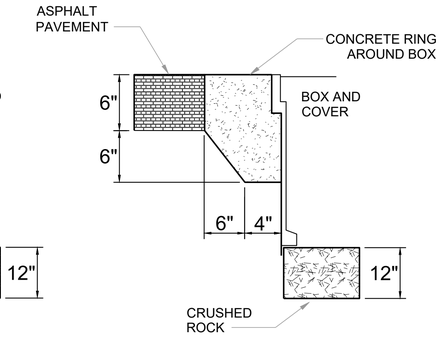

IN ASPHALT

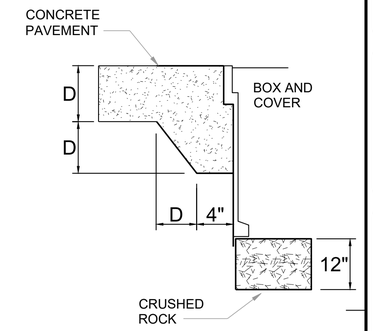

IN CONCRETE

HANDHOLE REQUIREMENTS:
1. HOUSING SHALL BE A POLYMER CONCRETE WITH HEAVY WEAVE FIBERGLASS REINFORCEMENT.
2. PROVIDE STAINLESS STEEL BOLTS AND INSERTS.
3. ANSI/SCTE 77 2013 TIER 15 RATED.
4. SIZE AS NOTED ON PLANS.
5. CONCRETE ENCASEMENT SHALL BE MINIMUM 3,000 PSI.
6. CONCRETE ENCASEMENT COLLAR DIMENSION, D, SHALL BE EQUAL TO DESIGN PAVEMENT DEPTH.

B2 E-501 ELECTRICAL HANDHOLE DETAIL
NOT TO SCALE

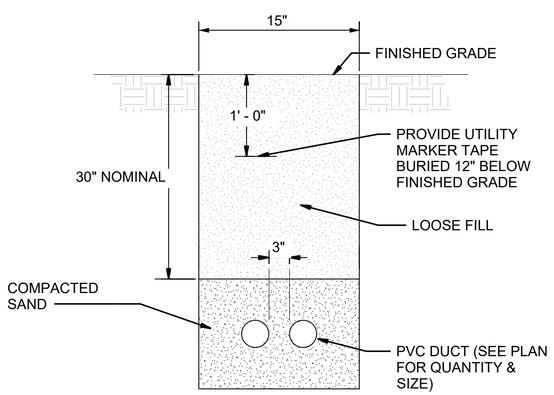

A1 E-501 UNDERGROUND CONDUIT DEPTH DETAIL
NOT TO SCALE

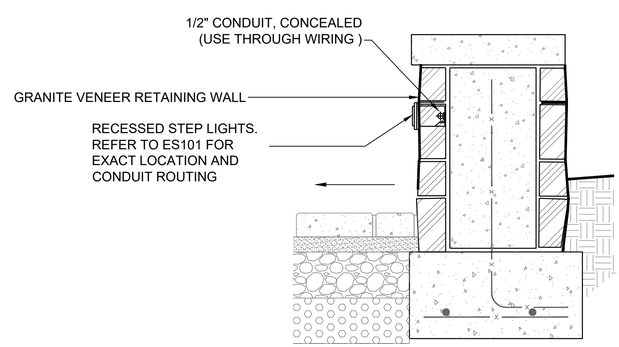

A2 E-501 STEP LIGHT MOUNTING DETAIL
NOT TO SCALE

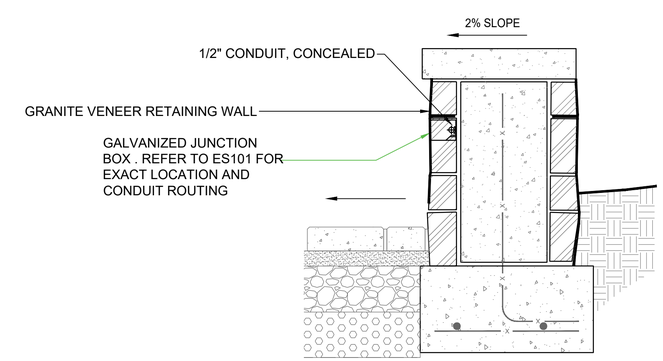

A4 E-501 GALVANIZED JUNCTION BOX MOUNTING DETAIL
NOT TO SCALE

SANDY SPRINGS
GEORGIA

GEORGIA REGISTERED No. PE037674 PROFESSIONAL ENGINEER JOSEPH M. STITT 10/11/17
SEAL

MARK	DESCRIPTION	DATE	APPR.
0	BID SET	2019.10.11	

DESIGNED BY: PIS
DWN BY: PIS
CKD BY: JMS
SUBMITTED BY:
FILE NAME: ES101.dwg
SIZE: 22" x 34"
PLOT SCALE: 1:1
DATE: OCTOBER 11, 2019
SOLICITATION NO.: -
CONTRACT NO.: -
FILE NUMBER: -
PLOT DATE: 10/10/2019

CITY OF SANDY SPRINGS
1 GALAMBOS WAY
SANDY SPRINGS, GA 30328

POND
3500 Parkway Lane
Peachtree Corners, GA
30092, SUITE 500
Phone 678.336.7740
Fax 678.336.7744
POND PROJECT No. 1190708

HERITAGE PARK IMPROVEMENTS

ELECTRICAL DETAILS

SHEET IDENTIFICATION NUMBER
E-501

FILE PATH: \\ACP3SERVER\RESOURCES\PROJECTS\FY19\1190708\04.CAD_BIM\04.02.CAD\ES101.DWG PLOTTED BY: SHAH, PINKI

GENERAL SHEET NOTES

1. REFER TO E-001 FOR ELECTRICAL GENERAL NOTES, ABBREVIATIONS, & SYMBOLS.
2. REFER TO ES101 FOR ELECTRICAL SITE PLAN.
3. BOND GROUNDING ELECTRODE TO BUILDING STEEL, DOMESTIC WATER, STRIP FOOTING REBAR, AND WELDED WIRE IN SLAB-ON-GRADE AS REQUIRED BY NEC 250.52.
4. NEW 60A 3 PHASE CIRCUIT BREAKER SHALL BE PLACED INSIDE EXISTING PANELBOARD 'A'. CONTRACTOR TO VERIFY PANELBOARD CAPACITY BEFORE ADDING ANY ADDITIONAL LOAD TO EXISTING PANELBOARD 'A'.
5. LIGHTING CONTROL PANEL LOCATED BESIDE SUB PANELBOARD 'SP'.
6. REFER TO GROUND BAR DETAIL C1/E-501.

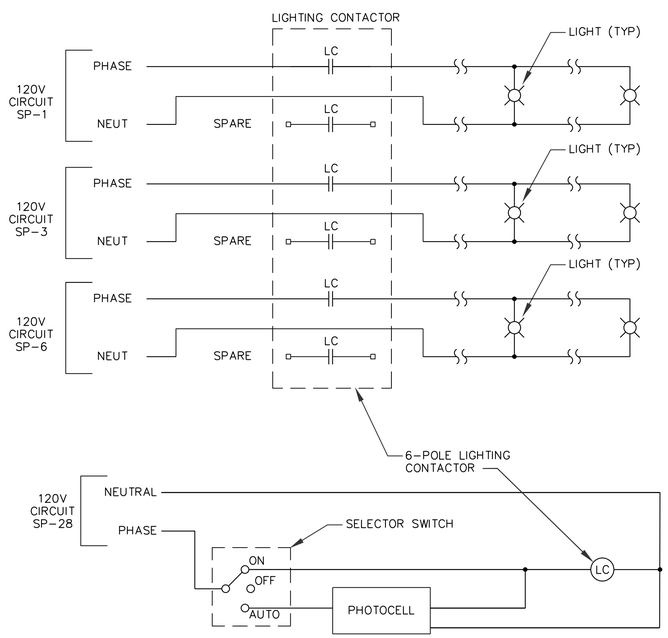

NOTE: SEE PLANS AND SCHEDULES FOR INDIVIDUAL CIRCUIT DESCRIPTIONS AND VOLTAGE REQUIREMENTS. LIGHTING CONTROL PANEL LOCATED BESIDE SUB PANEL 'SP'. SEE E-101B FOR SUB PANEL LOCATION.

A1 / E-601 LIGHTING CONTROL DIAGRAM

NOT TO SCALE

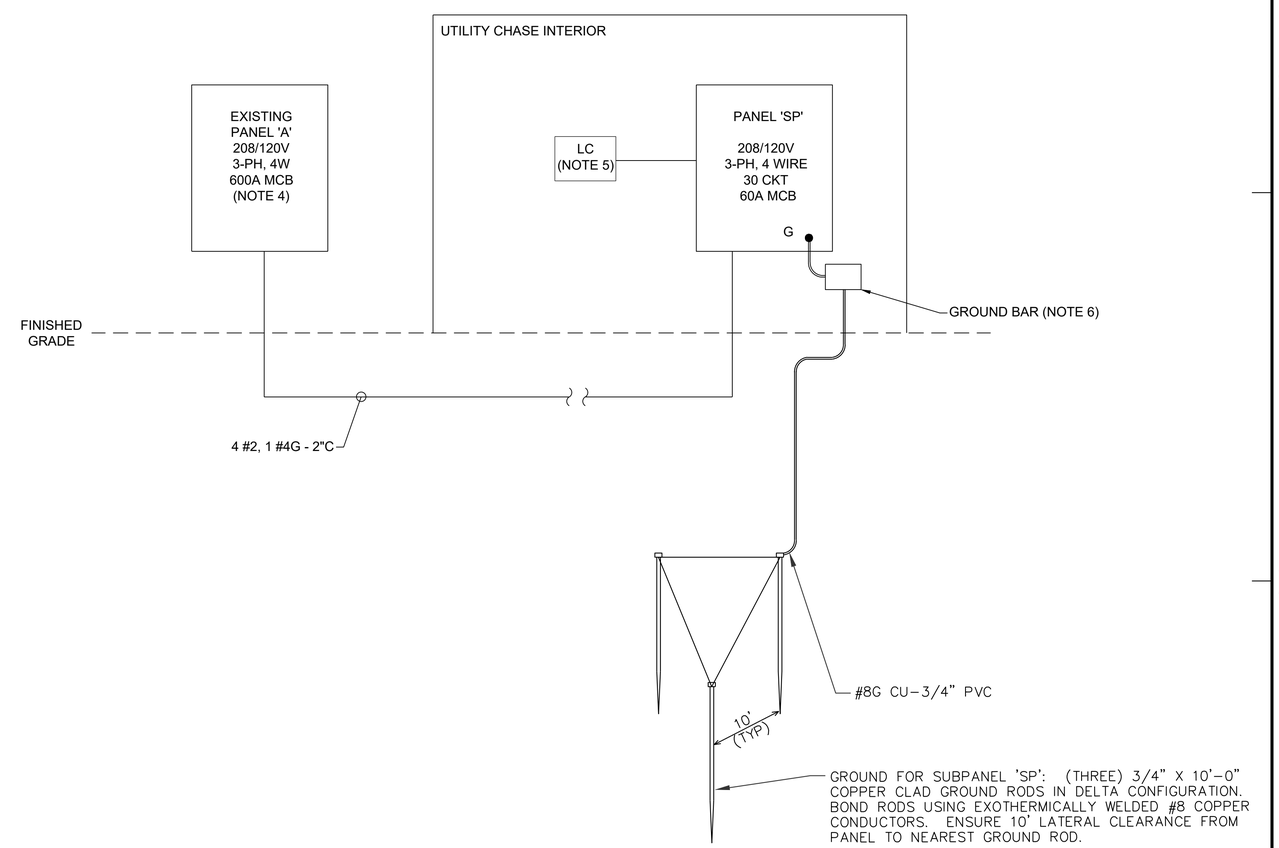

A3 / E-601 POWER RISER DIAGRAM

NOT TO SCALE

SANDY SPRINGS GEORGIA

SEAL

MARK	DESCRIPTION	DATE	APPR.
0	BID SET	2019.10.11	

DESIGNED BY: PIS
DWN BY: PIS
CKD BY: JMS
SUBMITTED BY:
DATE: OCTOBER 11, 2019
SOLICITATION NO.: -
CONTRACT NO.: -
FILE NUMBER: -
FILE NAME: ES101.dwg
SCALE: 22" x 34" 1:1
PLOT DATE: 10/10/2019

CITY OF SANDY SPRINGS
1 GALAMBOS WAY
SANDY SPRINGS, GA 30328

POND
3500 Parkway Lane
Peachtree Corners, GA
30092 Suite 550
Phone 678.336.7740
Fax 678.336.7744
POND PROJECT No.1190708

HERITAGE PARK IMPROVEMENTS

POWER RISER DIAGRAM

SHEET IDENTIFICATION NUMBER
E-601

FILE PATH: \\ACP3SERVER\RESOURCES\PROJECTS\FY19\1190708\04.CAD_BIM\04.02.CAD\ES101.DWG PLOTTED BY: SHAH, PINKI

PANELBOARD SCHEDULE SP

LOCATION: UTILITY CHASE 100
SUPPLY FROM: MAIN EXISTING PANELBOARD 'A'
MOUNTING: SURFACE
ENCLOSURE: NEMA 1

MAINS RATING: 60A MCB
VOLTAGE: 208Y/120
PHASES: 3
WIRES: 4

MINIMUM BREAKER SCCR: 22,000 A

				CONNECTED LOAD KVA									
CKT	**CIRCUIT DESCRIPTION**	**TRIP**	**POLE**	**A**		**B**		**C**		**POLE**	**TRIP**	**CIRCUIT DESCRIPTION**	**CKT**
1	LTG - INGROUND LIGHTS	20.0 A	1	0.01	0.28					1	20.0 A	LTG UNISEX 101 THRU 106	2
3	LTG - STAIRWELL LIGHTS	20.0 A	1			0.05	0.37		--	1	20.0 A	WATER FOUNTAIN	4
5	LTG - UTILITY CHASE RM 100	20.0 A	1					0.06	0.18	1	20.0 A	LTG - EXTERIOR	6
7	RECEPT - UTILITY CHASE RM 100	20.0 A	1	0.36	0.72					1	20.0 A	RECEPT - WP EXTERIOR	8
9	EUH UTILITY CHASE 100	20.0 A	2			1.51	0.75			2	20.0 A	EUH UNISEX 105	10
11	--	--	--					1.51	0.75	--	--	--	12
13	EF-1 UTILITY CHASE 100	20.0 A	2	0.20	0.75					2	20.0 A	EUH UNISEX 104	14
15	--	--	--			0.20	0.75			--	--	--	16
17	EUH UNISEX 106	20.0 A	2					0.75	0.06	1	20.0 A	LOUVER L-2	18
19	--	--	--	0.75	0.75					2	20.0 A	EUH UNISEX 101	20
21	EUH UNISEX 102	20.0 A	2			0.75	0.75			--	--	--	22
23	--	--	--					0.75	0.75	2	20.0 A	EUH UNISEX 103	24
25	SPARE	20.0 A	1	0.00	0.75					--	--	--	26
27	SPACE	--	--			0.00	0.10			1	20.0 A	LIGHTING CONTROL POWER	28
29	SPACE	--	--					0.00	0.00	1	20.0 A	SPARE	30
31	SPARE	20.0 A	1	0.00	0.00					--	--	SPACE	32
33	SPACE	--	--			0.00	0.00			--	--	SPACE	34
35	SPACE	--	--					0.00	0.00	--	--	SPACE	36
37	SURGE PROTECTION DEVICE	30.0 A	3	0.00	0.00					--	--	SPACE	38
39	--	--	--			0.00	0.00			--	--	SPACE	40
42	--	--	--					0.00	0.00	--	--	SPACE	42
			TOTAL LOAD:	4.57		5.23		4.81				**TOTAL CONNECTED LOAD:**	42.0 A

NOTES: INSTALL NEW 60A, 3 PHASE CIRCUIT BREAKER INSIDE EXISTING PANELBOARD 'A'. CONTRACTOR TO VERIFY PANELBOARD RATING AND AVAILABLE CAPACITY BEFORE ADDING ANY ADDITIONAL LOAD.

LIGHTING FIXTURE SCHEDULE

FIXTURE	DESCRIPTION	LAMP	LUMENS	CCT	VOLTAGE	WATTAGE	MOUNTING	MANUFACTURER
D	6" DIAMETER RECESSED LED	LED	1000	3000K	120 V	23 W	CEILING	LITHONIA LIGHTING-LDN6-30-10-L06AR-LSS, 80CRI
DE	6" DIAMETER RECESSED LED WITH EMERGENCY BATTERY PACK	LED	1000	3000K	120 V	23 W	CEILING	LITHONIA LIGHTING-LDN6-30-20-L06AR-LSS-EL, 80CRI
IN	FLUSH MOUNTED LED IN-GROUND	LED	1277	3000K	120 V	34 W	INGROUND	PHILIPS-HADCO-SL43BZWADA
S	RECESSED LED STEP LIGHTS ON VERTICAL FACE OF WALL (1)	LED	179	3000K	120 V	9 W	WALL RECESSED	PHILIPS-HADCO-RSC2-HK5DG2, 70CRI,MAKM
U	4' STRIP LIGHT PENDANT MOUNTED	LED	3862	3500K	120 V	30 W	PENDANT	UFIT-L46-4000LM-SEF-MVOLT-GZ10-35K-80CRI
WX	WALL-MOUNTED LUMINAIRE WITH EMERGENCY BATTERY PACK	LED	2260	3000K	120 V	26 W	WALL SURFACE	INVUE ENV-F01-LED-E1-BL2-BZ-BBB, 7030

NOTES:
1. DESIGN BASIS SHOWN FOR REFERENCE ONLY. FIXTURES OF EQUAL QUALITY AND PERFORMANCE ARE ACCEPTABLE. ALL FIXTURES MUST BE EQUAL IN MATERIAL, QUALITY, WARRANTY, PHOTOMETRIC, SIZE AND FINISH.
2. VERIFY CEILING TYPES WITH ARCHITECTURAL DRAWINGS PRIOR TO ORDERING.
3. WIRE EMERGENCY EXIT SIGN AHEAD OF ALL LOCAL SWITCHING.
4. SET ADJUSTABLE TYPE 'IN' FIXTURE TO 13W INPUT.

LIGHTING CONTROL SCHEDULE

SPACE TYPE	ROOM NUMBER	MANUAL ON	MANUAL OFF	LOW-VOLTAGE DIMMING SYSTEM	LINE VOLTAGE DIMMING SWITCH	OCCUPANCY SENSOR ON	OCCUPANCY SENSOR OFF	VACANCY SENSOR OFF	AUTO BI-LEVEL CONTROL	ASTRONOMICAL TIME CLOCK	ASTRONOMICAL TC WITH PHOTOCELL CONTROL	INTEGRAL MOTION CONTROL	DAYLIGHT DIMMING CONTROL	CONTROLS NARRATIVE
UTILITY CHASE	100	X	X					X						PROVIDE VACANCY OFF CEILING/WALL MOUNTED SENSOR(S) WITH LOCAL OVERRIDE SWITCH.
BATHROOMS	101 - 106					X	X							PROVIDE ON/OFF OCCUPANCY CONTROL WITH LOCAL OVERRIDE SWITCH FOR RESTROOM.
EXTERIOR/ BUILDING MOUNTED/ SITE LIGHTING	N/A										X			PROVIDE LIGHTING CONTACTOR FOR EXTERIOR FIXTURES WITH ASTRONOMICAL TIME CLOCK.

GENERAL SHEET NOTES

1. REFER TO E-001 FOR ELECTRICAL GENERAL NOTES, ABBREVIATIONS & LEGEND.
2. REFER TO E-101 FOR LIGHTING FIXTURE LOCATION.
3. REFER TO E-111 FOR MECHANICAL EQUIPMENT CONNECTION SCHEDULE.
4. REFER TO E-601 FOR POWER RISER DIAGRAM.
5. PROVIDE LOCAL DISCONNECTS FOR MECHANICAL EQUIPMENT AS INDICATED IN MECHANICAL EQUIPMENT CONNECTION SCHEDULE PER E-111.

KEYED NOTES

(1) REFER TO E-501 DETAIL A2/E-501 FOR WALL MOUNTED STEP LIGHT MOUNTING DETAIL.

SANDY SPRINGS GEORGIA

GEORGIA REGISTERED PROFESSIONAL ENGINEER No. PE037614 JOSEPH M. STITT 10/11/19
SEAL

MARK	DESCRIPTION	DATE	APPR.
0	BID SET	2019.10.11	

DESIGNED BY: PJS
DWN BY: PJS
CKD BY: JMS
SUBMITTED BY:
DATE: OCTOBER 11, 2019
SOLICITATION NO.: -
CONTRACT NO.: -
FILE NUMBER: -
FILE NAME: E-SP1.dwg
PLOT DATE: 10/10/2019
PLOT SCALE: 1:1
SIZE: 22" x 34"

CITY OF SANDY SPRINGS
1 GALAMBOS WAY
SANDY SPRINGS, GA 30328

POND
3500 Parkway Lane
Peachtree Corners, GA
30092-1177 USA
Phone 678.336.7740
Fax 678.336.7744
POND PROJECT No.119007.08

HERITAGE PARK IMPROVEMENTS

PANELBOARD, CONDUIT, & LIGHTING FIXTURE SCHEDULE

SHEET IDENTIFICATION NUMBER
E-602

FILE PATH: \\ACP3SERVER\RESOURCES\PROJECTS\FY19\119070804.CAD_BIM\04.02.CAD\ES101.DWG PLOTTED BY: SHAH, PINKI

GENERAL

ALL ELECTRICAL WORK SHALL BE IN ACCORDANCE WITH 2017 NATIONAL ELECTRICAL CODE.

CONTRACTOR SHALL PAY AND OBTAIN ALL PERMITS REQUIRED BY THE LOCAL BUILDING CODE.

DRAWINGS AND SPECIFICATIONS ARE COMPLEMENTARY, WHAT IS CALLED FOR BY ONE SHALL BE PROVIDED AS IF CALLED FOR IN BOTH. IN THE EVENT THERE IS A DISCREPANCY BETWEEN THE DRAWINGS AND SPECIFICATIONS, THE MORE STRICT OR HIGHER QUALITY SHALL BE PROVIDED.

CONTRACTOR SHALL FIELD VERIFY FIELD ALL DIMENSIONS PRIOR PURCHASING EQUIPMENT.

ELECTRICAL MATERIALS AND EQUIPMENT SHALL MEET THE REQUIREMENTS OF UL, WHERE UL STANDARDS ARE ESTABLISHED FOR THOSE ITEMS.

ALL ELECTRICAL WORK SHALL BE INSTALLED IN ACCORDANCE WITH NATIONAL ELECTRICAL CONTRACTORS ASSOCIATION (NECA) NATIONAL ELECTRICAL INSTALLATION STANDARDS (NEIS). WORK WHICH DOES NOT COMPLY WITH NEIS SHALL BE GROUNDS FOR REJECTION OF WORK. THE OWNER AND ENGINEER RESERVE THE RIGHT TO INSPECT ALL WORK AND HAVE CONTRACTOR TEST AND DEMONSTRATE FUNCTIONALLY OF ALL ELECTRICAL WORK.

ALL ITEMS INDICATED TO BE DEMOLISHED SHALL BE DISCONNECTED, REMOVED FROM THE SITE AND DEPOSED OF IN ACCORDANCE WITH LOCAL, STATE AND FEDERAL LAWS AND CODES. CONTRACTOR SHALL NOT REUSE DEMOLISHED ITEMS UNLESS SPECIFICALLY INDICATED ON THE DRAWINGS. THE CONTRACTOR SHALL REMOVE ALL USED MATERIAL AND SCRAP RELATIVE TO THE ELECTRICAL INSTALLATION AND LEAVE THE PREMISES IN CLEAN AND ORDERLY CONDITION. WHERE ITEMS ARE NOT INDICATED TO BE DEMOLISHED, THE ASSOCIATED CIRCUITRY AND CONDUIT SHALL BE REWORKED TO MAINTAIN CIRCUIT CONTINUITY TO ITEMS TO REMAIN.

ALL ELECTRICAL WORK SHALL BE WARRANTED BY CONTRACTOR FOR A PERIOD OF ONE YEAR FROM DATE OF FINAL ACCEPTANCE TO INCLUDE ALL PARTS AND LABOR.

SUBMITTALS FOR APPROVAL

PRODUCT DATA: SUBMIT PRODUCT DATA FOR THE FOLLOWING ITEMS:
- CONDUIT
- CONDUCTORS
- WIRING DEVICES
- PANELBOARDS
- INTERIOR LIGHTING
- EXTERIOR LIGHTING

WIRE AND CABLES

UNLESS OTHERWISE INDICATED, ALL CONDUCTORS SHALL BE COPPER WITH TYPE THHN/THWN INSULATION. CONDUCTORS NUMBER 8 AWG AND LARGER SHALL BE STRANDED. NUMBER 10 AWG AND NUMBER 12 AWG CONDUCTORS SHALL BE SOLID. CONDUCTORS FOR REMOTE CONTROL, ALARM AND SIGNAL CIRCUITS, CLASSES 1, 2 AND 3 SHALL BE STRANDED.

ALUMINUM CONDUCTORS MAY BE UTILIZED IN LIEU OF COPPER CONDUCTORS ONLY WHERE SPECIFICALLY INDICATED ON THE DRAWINGS. ALUMINUM CONDUCTORS SHALL NOT BE UTILIZED ON CIRCUITS FEEDING MECHANICAL EQUIPMENT.

ALL MULTI-WIRE BRANCH CIRCUITS SHALL BE EQUIPPED WITH DEDICATED NEUTRALS. WHERE HOMERUNS ARE GROUPED TOGETHER, PROVIDE THREE HOT CONDUCTORS, THREE NEUTRAL CONDUCTORS, AND ONE GROUND CONDUCTOR. NEUTRAL CONDUCTORS SHALL BE CONSIDERED AS CURRENT CARRYING CONDUCTORS. WHEN GROUPING HOME RUNS, CONDUCTOR SIZES SHALL BE ADJUSTED IN ACCORDANCE WITH NFPA 70 DUE TO NUMBER OF CURRENT CARRYING CONDUCTORS.

NEATLY TRAIN AND LACE WIRING INSIDE BOXES, ENCLOSURES AND PANELBOARDS.

MC CABLE: UL 1569

MC CABLE SHALL ONLY BE USED WHERE ALLOWED BY THE NEC.

CONDUIT AND FITTINGS

GALVANIZED RIGID STEEL CONDUIT (GRS): UL 6

INTERMEDIATE METAL CONDUIT (IMC): UL 1241

ELECTRICAL METALLIC TUBING (EMT): UL 797

FLEXIBLE METAL CONDUIT: UL 1

LIQUID-TIGHT FLEXIBLE METAL CONDUIT: UL 360

METAL CONDUIT AND EMT FITTINGS: UL 514B

STEEL OUTLET BOXES AND COVERS: UL 514A

SCHEDULE 40 PVC: UL 651 AND NEMA TC 2

TYPE EB PVC: TYPE EB-20 AND TYPE EB-35 PER UL 651, ASTM F512, AND NEMA TC 6 & 8

HDPE: SMOOTH WALL, LISTED FOR DIRECTIONAL BORING, MINIMUM SCHEDULE 80, ASTM F2160, NEMA TC 7.

EXTERIOR ABOVE GRADE CONDUIT SHALL BE GRS OR IMC.

DIRECT BURIED, BELOW GRADE OR SLAB DUCTS SHALL BE SCHEDULE 40 PVC. WHERE RISING ABOVE GRADE THROUGH CONCRETE SLABS, PVC DUCTS SHALL BE TRANSITIONED TO PVC COATED GRS OR IMC PRIOR TO THE 90 DEGREE ELBOW TURNING UPWARD.

WHERE DUCTS ARE INDICATED TO CONCRETE ENCASED, DUCTS SHALL BE SCHEDULE 40 PVC OR TYPE EB. WHERE CONCRETE ENCASED DUCTBANKS PASS UNDER VEHICLE ROADS OR PARKING LOTS THE DUCTBANKS SHALL BE STEEL REINFORCED.

DUCTS INSTALLED BELOW EXISTING PAVEMENT VIA DIRECTIONAL BORING SHALL BE HDPE.

INTERIOR CONDUIT NOT EXPOSED TO PHYSICAL DAMAGE SHALL BE EMT. EMT FITTINGS SHALL BE STEEL [COMPRESSION] [SET SCREW] TYPE.

PROVIDE A PULL STRING IN ALL SPARE CONDUITS.

PROVIDE FLEXIBLE STEEL CONDUIT BETWEEN 3 AND 6 FEET IN LENGTH FOR RECESSED AND SEMI-RECESSED LIGHTING FIXTURES; FOR EQUIPMENT SUBJECT TO VIBRATION, NOISE TRANSMISSION, OR MOVEMENT; AND FOR MOTORS. INSTALL FLEXIBLE CONDUIT TO ALLOW 20 PERCENT SLACK. PROVIDE LIQUID-TIGHT FLEXIBLE METALLIC CONDUIT IN WET AND DAMP LOCATIONS FOR EQUIPMENT SUBJECT TO VIBRATION, NOISE TRANSMISSION, MOVEMENT OR MOTORS. PROVIDE SEPARATE GROUND CONDUCTOR ACROSS FLEXIBLE CONNECTIONS.

DO NOT INSTALL ANY CONDUIT WITHIN CONCRETE SLABS, ROUTE CONDUITS UNDER SLABS.

SUPPORT CONDUIT IN ACCORDANCE WITH NEC.

MINIMUM CONDUIT SIZE SHALL BE 1/2".

CONDUIT IN FINISHED AREAS SHALL BE RECESSED ABOVE CEILINGS AND IN WALLS.

CABINETS, JUNCTION BOXES AND PULL BOXES

UL 50, ZINC COATED SHEET STEEL

OUTLET BOXES SHALL BE A MINIMUM OF 12-1/2 INCH DEEP. VOLUME OF BOXES SHALL EXCEED NEC REQUIRED VOLUME FOR QUANTITY AND SIZE OF CONDUCTORS CONTAINED.

GROUNDING AND BONDING

GROUND RODS: UL 508, 3/4" X 10' COPPER CLAD STEEL.

GROUND BARS: SIZE AS INDICATE AND MINIMUM 1/4" X 2" X 12" COPPER, WALL MOUNTED ON INSULATORS.

BELOW GRADE GROUNDING CONNECTIONS SHALL BE EXOTHERMIC TYPE OR COMPRESSION CONNECTORS.

PROVIDE A GROUND CONDUCTOR IN ALL RACEWAYS.

MAXIMUM RESISTANCE TO GROUND SHALL NOT EXCEED 25 OHMS.

HANGARS AND SUPPORTS

SUPPORT CONDUIT BY PIPE STRAPS, WALL BRACKETS, THREADED ROD CONDUIT HANGERS, OR CEILING TRAPEZE. FASTEN BY WOOD SCREWS TO WOOD; BY TOGGLE BOLTS ON HOLLOW MASONRY UNITS; BY CONCRETE INSERTS OR EXPANSION BOLTS ON CONCRETE OR BRICK; AND BY MACHINE SCREWS, WELDED THREADED STUDS, OR SPRING-TENSION CLAMPS ON STEEL WORK. THREADED C-CLAMPS MAY BE USED ON RIGID STEEL CONDUIT ONLY. DO NOT WELD CONDUITS OR PIPE STRAPS TO STEEL STRUCTURES. DO NOT EXCEED ONE-FOURTH PROOF TEST LOAD FOR LOAD APPLIED TO FASTENERS. PROVIDE VIBRATION RESISTANT AND SHOCK-RESISTANT FASTENERS ATTACHED TO CONCRETE CEILING. DO NOT CUT MAIN REINFORCING BARS FOR ANY HOLES CUT TO DEPTH OF MORE THAN 1-1/2 INCHES IN REINFORCED CONCRETE BEAMS OR TO DEPTH OF MORE THAN 3/4 INCH IN CONCRETE JOINTS. IN PARTITIONS OF LIGHT STEEL CONSTRUCTION, USE SHEET METAL SCREWS. IN SUSPENDED-CEILING CONSTRUCTION, RUN CONDUIT ABOVE CEILING. DO NOT SUPPORT CONDUIT BY CEILING SUPPORT SYSTEM. CONDUIT AND BOX SYSTEMS: SUPPORTED INDEPENDENTLY OF BOTH (A) TIE WIRES SUPPORTING CEILING GRID SYSTEM, AND (B) CEILING GRID SYSTEM INTO WHICH CEILING PANELS ARE PLACED. DO NOT SHARE SUPPORTING MEANS BETWEEN ELECTRICAL RACEWAYS AND MECHANICAL PIPING OR DUCTS. COORDINATE INSTALLATION WITH ABOVE-CEILING MECHANICAL SYSTEMS TO ASSURE MAXIMUM ACCESSIBILITY TO ALL SYSTEMS. SPRING-STEEL FASTENERS MAY BE USED FOR LIGHTING BRANCH CIRCUIT CONDUIT SUPPORTS IN SUSPENDED CEILINGS IN DRY LOCATIONS. WHERE CONDUIT CROSSES BUILDING EXPANSION JOINTS, PROVIDE SUITABLE [WATERTIGHT] EXPANSION FITTING THAT MAINTAINS CONDUIT ELECTRICAL CONTINUITY BY BONDING JUMPERS OR OTHER MEANS. FOR CONDUITS GREATER THAN 2-1/2 INCHES INSIDE DIAMETER, PROVIDE SUPPORTS TO RESIST FORCES OF 0.5 TIMES THE EQUIPMENT WEIGHT IN ANY DIRECTION AND 1.5 TIMES THE EQUIPMENT WEIGHT IN THE DOWNWARD DIRECTION.

MAKE CHANGES IN DIRECTION OF RUNS WITH SYMMETRICAL BENDS OR CAST-METAL FITTINGS. MAKE FIELD-MADE BENDS AND OFFSETS WITH HICKEY OR CONDUIT-BENDING MACHINE. DO NOT INSTALL CRUSHED OR DEFORMED CONDUITS. AVOID TRAPPED CONDUITS. PREVENT PLASTER, DIRT, OR TRASH FROM LODGING IN CONDUITS, BOXES, FITTINGS, AND EQUIPMENT DURING CONSTRUCTION. FREE CLOGGED CONDUITS OF OBSTRUCTIONS.

FASTEN CONDUITS TO SHEET METAL BOXES AND CABINETS WITH TWO LOCKNUTS WHERE REQUIRED BY NFPA 70, WHERE INSULATED BUSHINGS ARE USED, AND WHERE BUSHINGS CANNOT BE BROUGHT INTO FIRM CONTACT WITH THE BOX; OTHERWISE, USE AT LEAST MINIMUM SINGLE LOCKNUT AND BUSHING. PROVIDE LOCKNUTS WITH SHARP EDGES FOR DIGGING INTO WALL OF METAL ENCLOSURES. INSTALL BUSHINGS ON ENDS OF CONDUITS AND PROVIDE INSULATING TYPE WHERE REQUIRED BY NFPA 70.

IDENTIFICATION

PANELBOARDS: PROVIDE TYPE OR COMPUTER PRINTED CIRCUIT DIRECTORY INSIDE THE COVER DOOR. DIRECTORY SHALL INDICATE TYPE LOAD SERVED AND ROOM NUMBER(S) WHERE LOADS ARE LOCATED.

CONDUCTOR COLOR CODING:

GROUNDING CONDUCTORS:	GREEN
NEUTRAL CONDUCTORS:	WHITE OR GRAY
120/240V PHASE CONDUCTORS:	BLACK / RED
208Y/120V PHASE CONDUCTORS:	BLACK / RED / BLUE
480Y/277V PHASE CONDUCTORS:	BROWN / ORANGE / YELLOW

RECEPTACLES: PROVIDE LABEL ON EACH RECEPTACLE COVER PLATE TO INDICATE PANEL AND CIRCUIT NUMBER. LABEL SHALL BE *LAMINATED ENGRAVED PLASTIC*.

PROVIDE NEC REQUIRED SIGNS AND LABELS. SIGNS AND LABELS SHALL INCLUDE BUT AT NOT LIMITED TO: SERVICE ENTRANCES (NEC 230.2(E)), ARC FLASH (NEC 110.16); DISCONNECT MEANS (NEC 110.22); AND SERVICE EQUIPMENT AVAILABLE FAULT CURRENT (NEC 110.24)

OCCUPANCY AND VACANCY SENSORS

PROVIDE NO LESS QUANTITY OF SENSORS AS SHOWN ON PLANS BUT ADD ADDITIONAL SENSORS WHEN REQUIRED TO FULFILL COVERAGE REQUIREMENT FOR THE SPECIFIC MODEL SENSOR PROVIDED. SENSOR MUST BE PROVIDED WITH AN ADAPTIVE LEARNING FUNCTION THAT AUTOMATICALLY SETS SENSOR IN OPTIMUM CALIBRATION IN A SET PERIOD OF TIME AFTER INSTALLATION AND A NON-VOLATILE MEMORY THAT SAVES SETTINGS AFTER A POWER OUTAGE. PROVIDE SENSORS DESIGNED FOR CEILING, WALL OR WALL-BOX INSTALLATION AS INDICATED. PROVIDE HOUSING OF HIGH-IMPACT, INJECTION-MOLDED THERMOPLASTIC WITH A MULTI-SEGMENTED LENS FOR PIR AND DUAL TECHNOLOGY SENSORS. SENSOR OPERATION REQUIRES MOVEMENT TO ACTIVATE LUMINAIRES CONTROLLED AND TURNS LUMINAIRES OFF AFTER A SET TIME OF INACTIVITY.

PROVIDE CEILING OR WALL-MOUNTED PASSIVE INFRARED (PIR) SENSORS MEETING THE FOLLOWING REQUIREMENTS:

TEMPERATURE COMPENSATED, DUAL ELEMENT SENSOR AND A MULTI-ELEMENT FRESNEL LENS.

TECHNOLOGY TO OPTIMIZE AUTOMATIC TIME DELAY TO FIT OCCUPANT USAGE PATTERNS. NO MINIMUM LOAD REQUIREMENT FOR LINE VOLTAGE SENSORS AND BE CAPABLE OF SWITCHING FROM ZERO TO 800 W AT 120 VAC, 50/60 HZ AND FROM ZERO TO 1200 W AT 277 VAC, 50/60 HZ.

TIME DELAY OF FIVE TO 30 MINUTES IN INCREMENTS OF FIVE MINUTES WITH A WALK THROUGH AND TEST MODE SET BY DIP SWITCH.

LED INDICATOR THAT REMAINS ACTIVE DURING OCCUPANCY.

BUILT-IN LIGHT LEVEL SENSOR THAT IS OPERATIONAL FROM 8 TO 180 FOOT-CANDLES.

COVERAGE PATTERN TESTED TO NEMA WD 7 STANDARDS.

STANDARD FIVE YEAR WARRANTY AND BE UL LISTED

PROVIDE CEILING-MOUNTED ULTRASONIC SENSORS MEETING THE FOLLOWING REQUIREMENTS:

OPERATE AT AN ULTRASONIC FREQUENCY OF 25 KHZ.

LED ON EXTERIOR OF DEVICE TO INDICATE OCCUPANT DETECTION.

ADJUSTABLE TIME DELAY PERIOD OF 15 SECONDS TO 15 MINUTES.

UL LISTED WITH MINIMUM FIVE YEAR WARRANTY.

PROVIDE DUAL TECHNOLOGY SENSORS THAT MEET THE REQUIREMENTS FOR PIR SENSORS AND ULTRASONIC SENSORS INDICATED ABOVE. IF EITHER THE PASSIVE INFRARED OR ULTRASONIC SENSING REGISTERS OCCUPANCY, THE LUMINAIRES MUST REMAIN ON.

PROVIDE TESTING OF SENSOR COVERAGE IN ALL SPACES WHERE SENSORS ARE PLACED. THIS SHOULD BE DONE ONLY AFTER ALL FURNISHINGS (CARPET, FURNITURE, WORKSTATIONS, ETC.) HAVE BEEN INSTALLED. PROVIDE QUANTITY OF SENSOR UNITS INDICATED AS A MINIMUM. PROVIDE ADDITIONAL UNITS TO GIVE FULL COVERAGE OVER CONTROLLED AREA. FULL COVERAGE MUST PROVIDE HAND AND ARM MOTION DETECTION FOR OFFICE AND ADMINISTRATION TYPE AREAS AND WALKING MOTION FOR INDUSTRIAL AREAS, WAREHOUSES, STORAGE ROOMS AND HALLWAYS. LOCATE THE SENSOR(S) AS INDICATED AND IN ACCORDANCE WITH THE MANUFACTURER'S RECOMMENDATIONS TO MAXIMIZE ENERGY SAVINGS AND TO AVOID NUISANCE ACTIVATION AND DEACTIVATION DUE TO SUDDEN TEMPERATURE OR AIRFLOW CHANGES AND USAGE.

PANELBOARDS

UL 67 AND UL 50 ENCLOSURE, CIRCUIT BREAKER EQUIPPED. PANELBOARD CIRCUIT BREAKERS SHALL BE FULLY RATED, SERIES RATING IS NOT ACCEPTABLE. PANELBOARD BUSES SHALL BE *COPPER*. PANELBOARD CIRCUIT BREAKERS SHALL BE UL 489, MOLDED CASE TYPE WITH THERMAL MAGNETIC TRIPS OR ELECTRONIC TRIPS WHERE INDICATED. ALL CIRCUIT BREAKERS SHALL BE BOLT ON TYPE.

WIRING DEVICES

TOGGLE SWITCHES: UL 20, NEMA WD 1. *WHITE* IN COLOR.

RECEPTACLES: UL 498 GROUNDING TYPE, RATINGS AS INDICATED. *WHITE* IN COLOR. *SCREW TYPE SIDE WIRE OR PRESSURE TYPE HAVE CONDUCTOR RELEASE ARRANGEMENT*.

WEATHER PROOF RECEPTACLES: UL LISTED FOR "WET LOCATIONS". CAST METAL BOX WITH GASKETED, HINGED, WEATHERPROOF CORD IN USE *UV STABILIZED POLYCARBONATE* COVER.

GFCI RECEPTACLES: UL 943

DEVICE PLATES ON FINISHED WALLS: UL LISTED NYLON OR LEXAN, COLOR TO MATCH WIRING DEVICES.

DEVICE PLATES ON UNFINISHED WALLS: UL LISTED ZINC COATED SHEET STEEL OR CAST METAL WITH ROUNDED EDGES.

FUSES

CLASS CC: UL 198M, 0-30A FOR CONTROL CIRCUITS

DISCONNECT SWITCHES

NEMA KS 1. PROVIDE HEAVY DUTY-TYPE SWITCHES WHERE INDICATED, WHERE SWITCHES ARE RATED HIGHER THAN 240 VOLTS, AND FOR DOUBLE-THROW SWITCHES. UTILIZE CLASS R FUSE HOLDERS AND FUSES FOR FUSED SWITCHES, UNLESS INDICATED OTHERWISE. PROVIDE HORSEPOWER RATED FOR SWITCHES SERVING AS THE MOTOR-DISCONNECT MEANS. PROVIDE SWITCHES IN NEMA ENCLOSURE AS INDICATED.

ENCLOSED CIRCUIT BREAKERS

UL 498, INDIVIDUAL MOLDED CASE CIRCUIT BREAKERS WITH VOLTAGE AND CONTINUOUS CURRENT RATINGS, NUMBER OF POLES, OVERLOAD TRIP SETTING, AND SHORT CIRCUIT RATING AS INDICATED. PROVIDE ENCLOSURE NEMA TYPE INDICATED.

SANDY SPRINGS
GEORGIA

GEORGIA REGISTERED PROFESSIONAL ENGINEER No. PE0... JOSEPH M. STITT 10/11/19
SEAL

MARK	DESCRIPTION	DATE	APPR
0	BID SET	2019.10.11	

DATE: OCTOBER 11, 2019
SOLICITATION NO.: -
CONTRACT NO.: -
FILE NUMBER: -
PLOT DATE: 10/10/2019
DESIGNED BY: PIS
DWN BY: PIS
CKD BY: JMS
SUBMITTED BY: -
FILE NAME: ES101.dwg
SIZE: 22" x 34"
PLOT SCALE: 1:1

CITY OF SANDY SPRINGS
1 GALAMBOS WAY
SANDY SPRINGS, GA 30328

POND
3500 Parkway Lane, Peachtree Corners, GA 30092, SUITE 500
Phone 678.336.7740 Fax 678.336.7744
POND PROJECT No. 11190708

HERITAGE PARK IMPROVEMENTS

ELECTRICAL SPECIFICATIONS

SHEET IDENTIFICATION NUMBER
E-701

FILE PATH: \\ACP3SERVER\RESOURCES\PROJECTS\FY19\11190708\04_CAD_BIM\04.02_CAD\ES101.DWG PLOTTED BY: SHAH, PINKI

SURGE PROTECTIVE DEVICES (SPD'S)

UL 1449, 4TH EDITION

PROVIDE SPD AT SERVICE ENTRANCE WITH MINIMUM SURGE CURRENT RATING OF 80,000 AMPERES FOR L-L MODE AND 40,000 AMPERES FOR L-N, L-G AND N-G MODES. PROVIDE SPD'S WHERE INDICATED AT DOWNSTREAM PANELS WITH MINIMUM SURGE CURRENT RATING OF 40,000 AMPERES FOR L-L MODE AND 20,000 AMPERES FOR L-N, L-G AND N-G MODES.

208Y/120V, THREE PHASE SYSTEM
MAXIMUM L-N, L-G AND N-G VOLTAGE PROTECTION RATING: 700V
MAXIMUM L-L VOLTAGE PROTECTION RATING: 1,200V

INTERIOR LIGHTING

UL 1598 AND UL 8750. PROVIDE LUMINAIRES AS INDICATED IN LUMINAIRE SCHEDULE ***[AND DETAILS]*** ON PROJECT PLANS. PROVIDE LUMINAIRES COMPLETE WITH LIGHT SOURCES OF QUANTITY, TYPE, AND WATTAGE INDICATED. PROVIDE ALL LUMINAIRES OF THE SAME TYPE BY THE SAME MANUFACTURER. LUMINAIRES MUST BE SPECIFICALLY DESIGNED FOR USE WITH THE DRIVER AND LIGHT SOURCE PROVIDED.

PROVIDE LED LUMINAIRES COMPLETE WITH POWER SUPPLIES (DRIVERS) AND LIGHT SOURCES. LED LUMINAIRES MUST MEET THE MINIMUM REQUIREMENTS:

- LUMINAIRES MUST HAVE A MINIMUM 5 YEAR MANUFACTURER'S WARRANTY.
- LUMINAIRES MUST HAVE A MINIMUM L70 LUMEN MAINTENANCE VALUE OF 50,000 HOURS AS CALCULATED BY IES TM-21, WITH DATA OBTAINED PER IES LM-80 REQUIREMENTS.
- LUMINAIRE DRIVE CURRENT VALUE MUST BE IDENTICAL TO THAT PROVIDED BY TEST DATA FOR LUMINAIRE IN QUESTION.
- LUMINAIRES MUST BE TESTED TO IES LM-79 AND IES LM-80 STANDARDS.
- LUMINAIRES MUST BE LISTED WITH THE DESIGN LIGHTS CONSORTIUM 'QUALIFIED PRODUCTS LIST' WHEN FALLING INTO CATEGORY OF "GENERAL APPLICATION" LUMINAIRES, I.E. INTERIOR DIRECTIONAL, DISPLAY CASE, TROFFER, LINEAR AMBIENT, OR LOW/HIGH BAY.

LED DRIVERS SHALL MEET NEMA SSL 1 AND UL 8750. LED DRIVERS MUST BE ELECTRONIC, UL CLASS 1, CONSTANT-CURRENT TYPE AND COMPLY WITH THE FOLLOWING REQUIREMENTS:

- OUTPUT POWER (WATTS)AND LUMINOUS FLUX (LUMENS) AS SHOWN IN LUMINAIRE SCHEDULE FOR EACH LUMINAIRE TYPE TO MEET MINIMUM LUMINAIRE EFFICACY (LE) VALUE PROVIDED.
- POWER FACTOR (PF) GREATER THAN OR EQUAL TO 0.9 OVER THE FULL DIMMING RANGE WHEN PROVIDED.
- CURRENT DRAW TOTAL HARMONIC DISTORTION (THD) OF LESS THAN 20 PERCENT.
- CLASS A SOUND RATING.
- OPERABLE AT INPUT VOLTAGE OF 120-277 VOLTS AT 60 HERTZ.
- MINIMUM 5 YEAR MANUFACTURER'S WARRANTY.
- ROHS COMPLIANT.
- INTEGRAL THERMAL PROTECTION THAT REDUCES OR ELIMINATES THE OUTPUT POWER IF CASE TEMPERATURE EXCEEDS A VALUE DETRIMENTAL TO THE DRIVER.
- UL LISTED FOR DRY OR DAMP LOCATIONS TYPICAL OF INTERIOR INSTALLATIONS.
- FULLY-DIMMABLE USING 0-10V CONTROL

FIXTURE SUPPORT WIRES: ASTM A641/A641M; GALVANIZED, SOFT TEMPERED STEEL, MINIMUM 0.11 INCHES IN DIAMETER, OR GALVANIZED, BRAIDED STEEL, MINIMUM 0.08 INCHES IN DIAMETER.

PROVIDE LIGHTING FIXTURE SUPPORT WIRES INDEPENDENT OF THE CEILING GRID SUPPORT WIRES. PROVIDE A MINIMUM OF FOUR SUPPORT WIRES PER FIXTURE WITH WIRE CONNECTED NEAR CORNERS OF FIXTURE.

PENDANT MOUNTED FIXTURES SHALL BE SUPPORTED VIA THREADED ROD, STAINLESS STEEL AIRCRAFT CABLE, OR CONDUIT AS INDICATED IN THE LIGHTING FIXTURE SCHEDULE.

PROVIDE HANGERS CAPABLE OF SUPPORTING TWICE THE COMBINED WEIGHT OF LUMINAIRES SUPPORTED BY HANGERS. PROVIDE WITH SWIVEL HANGERS TO ENSURE A PLUMB INSTALLATION. PROVIDE CADMIUM-PLATED STEEL WITH A SWIVEL-BALL TAPPED FOR THE CONDUIT SIZE INDICATED. HANGERS MUST ALLOW FIXTURES TO SWING WITHIN AN ANGLE OF 45 DEGREES. BRACE PENDANTS 4 FEET OR LONGER TO LIMIT SWINGING. SINGLE-UNIT SUSPENDED LUMINAIRES MUST HAVE TWIN-STEM HANGERS. MULTIPLE-UNIT OR CONTINUOUS ROW LUMINAIRES MUST HAVE A TUBING OR STEM FOR WIRING AT ONE POINT AND A TUBING OR ROD SUSPENSION PROVIDED FOR EACH UNIT LENGTH OF CHASSIS, INCLUDING ONE AT EACH END. PROVIDE RODS IN MINIMUM 0.18 INCH DIAMETER.

EXTERIOR LIGHTING

LUMINAIRES: UL 1598, NEMA C82.77 AND UL 8750.

PROVIDE LUMINAIRES AS INDICATED IN LUMINAIRE SCHEDULE [AND DETAILS} ON PROJECT PLANS. PROVIDE LUMINAIRES COMPLETE WITH LIGHT SOURCES OF QUANTITY, TYPE, AND WATTAGE INDICATED. PROVIDE ALL LUMINAIRES OF THE SAME TYPE BY THE SAME MANUFACTURER. LUMINAIRES MUST BE SPECIFICALLY DESIGNED FOR USE WITH THE DRIVER AND LIGHT SOURCE PROVIDED.

PROVIDE LED LUMINAIRES COMPLETE WITH POWER SUPPLIES (DRIVERS) AND LIGHT SOURCES. LED LUMINAIRES MUST MEET THE MINIMUM REQUIREMENTS:

LED LUMINAIRE HOUSINGS SHALL BE DIE CAST OR EXTRUDED ALUMINUM. FABRICATED ALUMINUM HOUSINGS SHALL HAVE ALL SEAMS AND CORNERS INTERNALLY WELDED TO RESIST WEATHERING, MOISTURE AND DUST.

LED LUMINAIRES SHALL BE RATED FOR OPERATION WITHIN AN AMBIENT TEMPERATURE RANGE OF MINUS 22 DEGREES F TO 104 DEGREES F.

LUMINAIRES SHALL BE UL LISTED FOR WET LOCATIONS PER UL 1598. OPTICAL COMPARTMENT FOR LED LUMINAIRES SHALL BE SEALED AND RATED A MINIMUM OF IP65.

HOUSING FINISH SHALL BE BAKED-ON ENAMEL, ANODIZED, OR BAKED-ON POWDER COAT PAINT. FINISH SHALL BE CAPABLE OF SURVIVING ASTM B117 SALT FOG ENVIRONMENT TESTING FOR 2500 HOURS MINIMUM WITHOUT BLISTERING OR PEELING

LUMINAIRE ARM BOLTS SHALL BE 304 STAINLESS STEEL OR ZINC-PLATED STEEL.

LUMINAIRE LENSES SHALL BE CONSTRUCTED OF *FROSTED* TEMPERED GLASS OR UV-RESISTANT ACRYLIC.

THE WIRING COMPARTMENT ON POLE-MOUNTED, STREET AND AREA LUMINAIRES MUST BE ACCESSIBLE WITHOUT THE USE OF HAND TOOLS TO MANIPULATE SMALL SCREWS, BOLTS, OR HARDWARE.

ALL FACTORY ELECTRICAL CONNECTIONS SHALL BE MADE USING CRIMP, LOCKING, OR LATCHING STYLE CONNECTORS. TWIST-STYLE WIRE NUTS ARE NOT ACCEPTABLE.

CORRELATED COLOR TEMPERATURE (CCT) SHALL BE NOMINAL 4000 DEGREES K. COLOR RENDERING INDEX (CRI) SHALL BE GREATER THAN OR EQUAL TO 70.

LED POWER SUPPLY UNITS (DRIVERS) SHALL MEET THE REQUIREMENTS OF UL 1310 AND MEET THE FOLLOWING REQUIREMENTS:

- MINIMUM EFFICIENCY SHALL BE 85 PERCENT.
- DRIVE CURRENT TO EACH INDIVIDUAL LED SHALL NOT EXCEED 600 MA, PLUS OR MINUS 10 PERCENT.
- SHALL BE RATED TO OPERATE BETWEEN AMBIENT TEMPERATURES OF MINUS 22 DEGREES F AND 104 DEGREES F. SHALL BE EQUIPPED WITH OVER-TEMPERATURE PROTECTION CIRCUIT THAT TURNS LIGHT SOURCE OFF UNTIL NORMAL OPERATING TEMPERATURE IS ACHIEVED.
- SHALL BE DESIGNED TO OPERATE ON THE VOLTAGE SYSTEM TO WHICH THEY ARE CONNECTED, TYPICALLY RANGING FROM 120 V TO 480 V NOMINAL.
- POWER FACTOR (PF) SHALL BE GREATER THAN OR EQUAL TO 0.90.
- TOTAL HARMONIC DISTORTION (THD) CURRENT SHALL BE LESS THAN OR EQUAL TO 20 PERCENT.
- SHALL MEET REQUIREMENTS OF 47 CFR 15, CLASS B.
- SHALL BE ROHS-COMPLIANT.
- SHALL BE MOUNTED INTEGRAL TO LUMINAIRE. REMOTE MOUNTING OF POWER SUPPLY IS NOT ALLOWED.
- POWER SUPPLIES IN LUMINAIRES MOUNTED UNDER A COVERED STRUCTURE, SUCH AS A CANOPY, OR WHERE OTHERWISE APPROPRIATE SHALL BE UL LISTED WITH A SOUND RATING OF A.

PROVIDE SURGE PROTECTION INTEGRAL TO LUMINAIRES TO MEET C LOW WAVEFORMS AS DEFINED BY IEEE C62.41.2, SCENARIO 1, LOCATION CATEGORY C.

PHOTOCELLS SHALL COMPLY WITH UL 773 OR UL 773A. PHOTOCELLS SHALL BE HERMETICALLY SEALED, SILICON DIODE LIGHT SENSOR TYPE, 60 HZ WITH SINGLE-POLE, SINGLE-THROW CONTACTS. PHOTOCELL SHALL BE DESIGNED TO FAIL TO THE ON POSITION. HOUSING SHALL BE CONSTRUCTED OF [POLYCARBONATE] [DIE CAST ALUMINUM] [UV STABILIZED POLYPROPYLENE], RATED TO OPERATE WITHIN A TEMPERATURE RANGE OF MINUS 40 TO 158 DEGREES F. PHOTOCELL SHALL TURN ON AT 1-3 FOOT-CANDLES AND TURN OFF AT 3 TO 15 FOOT-CANDLES. A TIME DELAY SHALL PREVENT ACCIDENTAL SWITCHING FROM TRANSIENT LIGHT SOURCES. PROVIDE PHOTOCELL WITH METAL OXIDE VARISTOR (MOV) TYPE SURGE PROTECTION.

TIME SWITCH SHALL BE AN ELECTRONIC TYPE WITH A 24 HOUR, 7 DAY PROGRAMMING FUNCTION, PROVIDING A TOTAL OF 56 MINIMUM ON/OFF SET POINTS. DIGITAL CLOCK DISPLAY FORMAT SHALL BE AM/PM 12 HOUR TYPE. PROVIDE POWER OUTAGE BACKUP FOR SWITCH UTILIZING A CAPACITOR OR BATTERY WHICH PROVIDES COVERAGE FOR A MINIMUM OF 7 DAYS. TIME SWITCH SHALL PROVIDE CONTROL TO 1 CHANNEL OR LOAD. CONTACTS SHALL BE RATED FOR THE LOAD INDICATED. PROVIDE SWITCH OR FUNCTION THAT ALLOWS AUTOMATIC CONTROL TO BE SKIPPED ON CERTAIN SELECTED DAYS OF THE WEEK AND MANUAL BYPASS OR REMOTE OVERRIDE CONTROL. TIME SWITCH SHALL BE HOUSED IN A SURFACE-MOUNTED, LOCKABLE NEMA [1] [3R] ENCLOSURE CONSTRUCTED OF PAINTED STEEL OR PLASTIC POLYMER CONFORMING TO NEMA ICS 6.

LIGHTING CONTACTOR SHALL COMPLY WITH NEMA ICS 2. PROVIDE A [MECHANICALLY][ELECTRICALLY]-HELD LIGHTING CONTACTOR HOUSED IN A NEMA [1] [3R] ENCLOSURE. CONTACTOR SHALL HAVE ***6*** POLES. CONTACTS SHALL BE RATED FOR LOAD INDICATED. COIL OPERATING VOLTAGE SHALL BE 120 VOLTS. CONTACTOR SHALL HAVE SILVER CADMIUM OXIDE DOUBLE-BREAK CONTACTS AND SHALL REQUIRE NO ARCING CONTACTS. [PROVIDE CONTACTOR WITH *HAND-OFF-AUTOMATIC* SELECTOR SWITCH.

FIRE STOPPING

FIRE STOP ALL ELECTRICAL PENETRATIONS OF RATED FLOORS AND WALLS. PROVIDE FIRESTOPPING MATERIALS, SUPPLIED FROM A SINGLE DOMESTIC MANUFACTURER, CONSISTING OF COMMERCIALLY MANUFACTURED, ASBESTOS-FREE, NONTOXIC PRODUCTS FM APP GUIDE APPROVED, OR UL LISTED, FOR USE WITH APPLICABLE CONSTRUCTION AND PENETRATING ITEMS.

MATERIAL SHALL HAVE A FLAME SPREAD OF 25 OR LESS, AND A SMOKE DEVELOPED RATING OF 50 OR LESS, WHEN TESTED IN ACCORDANCE WITH ASTM E84 OR UL 723. MATERIAL SHALL BE AN APPROVED FIRESTOPPING MATERIAL AS LISTED IN UL FIRE RESISTANCE OR BY A NATIONALLY RECOGNIZED TESTING LABORATORY.

MATERIAL SHALL BE NONTOXIC AND CARCINOGEN FREE TO HUMANS AT ALL STAGES OF APPLICATION OR DURING FIRE CONDITIONS AND SHALL NOT CONTAIN HAZARDOUS CHEMICALS OR REQUIRE HARMFUL CHEMICALS TO CLEAN MATERIAL OR EQUIPMENT.

FIRESTOP SYSTEMS SHALL BE UL FIRE RESISTANCE LISTED OR FM APP GUIDE APPROVED WITH "F" RATING AT LEAST EQUAL TO FIRE-RATING OF FIRE WALL OR FLOOR IN WHICH PENETRATED OPENINGS ARE TO BE PROTECTED. WHERE REQUIRED, FIRESTOP SYSTEMS SHALL ALSO HAVE "T" RATING AT LEAST EQUAL TO THE FIRE-RATED FLOOR IN WHICH THE OPENINGS ARE TO BE PROTECTED.

FIRESTOPPING MATERIALS FOR THROUGH-PENETRATIONS SHALL PROVIDE "F", "T" AND "L" FIRE RESISTANCE RATINGS IN ACCORDANCE WITH ASTM E814 OR UL 1479.

5

SANDY SPRINGS GEORGIA

GEORGIA REGISTERED No. PE00... PROFESSIONAL ENGINEER JOSEPH M. STITT 10/11/19

SEAL

MARK	DESCRIPTION	DATE	APPR.
0	BID SET	2019.10.11	

DESIGNED BY: PIS | DATE: OCTOBER 11, 2019
DWN BY: PIS | CKD BY: JMS | SOLICITATION NO.: -
SUBMITTED BY: | CONTRACT NO.: -
FILE NAME: ES101.dwg | FILE NUMBER: -
SIZE: 22" x 34" | PLOT SCALE: 1:1 | PLOT DATE: 10/10/2019

CITY OF SANDY SPRINGS
1 GALAMBOS WAY
SANDY SPRINGS, GA 30328

POND
3500 Parkway Lane, Peachtree Corners, GA 30092, SUITE 500
Phone: 678.336.7740 Fax: 678.336.7744
POND PROJECT No. 11190708

HERITAGE PARK IMPROVEMENTS

ELECTRICAL SPECIFICATIONS CONT.

SHEET IDENTIFICATION NUMBER
E-702

FILE PATH: \\ACP3SERVER\RESOURCES\PROJECTS\FY19\11190708\04_CAD_BIM\04.02_CAD\ES101.DWG PLOTTED BY: SHAH, PINKI